Miele

Operating Instructions
Washing machine

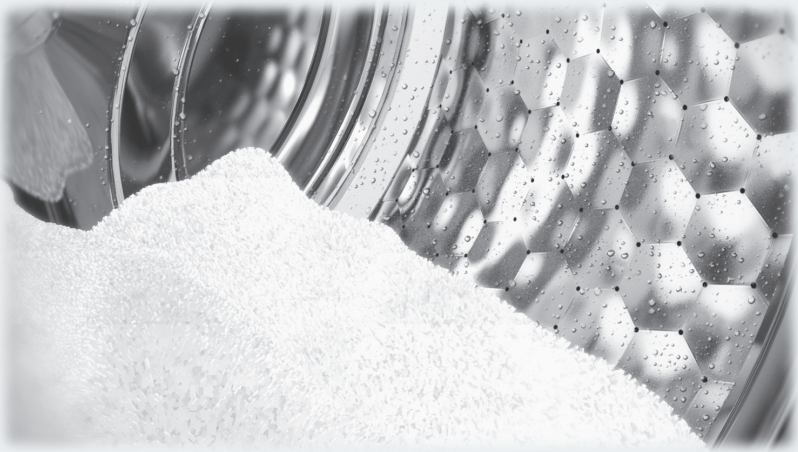

It is **essential** to read these operating instructions before installation or use of this appliance. This prevents both personal injury and damage to the appliance.

en-CA

M.-Nr. 11 003 030

Caring for the environment

Disposal of the packaging material

The cardboard box and packaging materials protect the appliance during shipping. They have been designed to be biodegradable and recyclable.

Recycling the packaging reduces the use of raw materials in the manufacturing process and also the amount of waste.

Disposal of your old appliance

Electronic and electrical appliances contain many valuable materials. They also contain certain materials, compounds and components which were essential for the proper functioning and safe use of the equipment. These could be hazardous to your health and to the environment if disposed of with general waste or if handled incorrectly. Therefore, please do not dispose of your old appliance with general waste.

Consult with local authorities, dealers or Miele in order to dispose of and recycle electrical and electronic appliances. Miele assumes no responsibility for deleting any personal data left on the appliance being disposed. Please ensure that your old appliance is kept away from children until removal. Observe safety requirements for appliances that may tip over or pose an entrapment hazard.

Contents

Caring for the environment 2

Important safety instructions 6

Operating the washing machine 11
Control panel 11
How the control panel works 12

Before using for the first time 14
Removing the protective foil and stickers 14

Environmentally friendly washing 16

1. Preparing the laundry 17

2. Loading the washing machine 18

3. Selecting a program 19

4. Adding detergent 21
Detergent dispenser drawer 21
Dispensing aids 21
Using chlorine bleach 22
Using powder detergent 22
Using detergent tablets or pods 22
Using fabric softener and liquid starch 23
CapDosing 23

5. Starting a program 26

6. Program end – removing the laundry 27

Spinning 28

Delay start 30

Program chart 31

Extra options 34
Heavy soiling 34
Light soiling 34
Prewash 34
Buzzer 34
The following extra options can be selected in addition to the programs 35

Changing the program sequence 36
Changing the program 36
Cancelling a program 36
Interrupting a program 36
Adding or removing laundry 37

Contents

Detergent 38
Miele-recommended detergents 38
General detergent recommendations 39

Cleaning and care 40
Cleaning the drum (Hygiene info) 40
Cleaning the housing and control panel 40
Cleaning the detergent dispensing drawer 40
Cleaning the water inlet filter 43

Frequently asked questions 44
Problem solving guide 44
The wash program will not start 44
The program is cancelled and a fault indicator light lights up on the control panel 45
During the program, a symbol appears on the time display 46
An indicator light in the control panel lights up at the end of the program. 46
General problems with the washing machine 47
An unsatisfactory wash result 49
The door will not open 50
Opening the door in the event of a blocked drain outlet and/or power failure 51

Technical Service 53
Contact in case of a fault 53
Optional accessories 53
Warranty 53

Installation 56
Front view 56
Rear view 57
Installation surface 58
Transporting the washing machine to its installation site 58
Removing the shipping struts 58
Refitting the transit bars 60
Levelling the machine 61
Unscrewing and adjusting the feet 61
Additional installation requirements 62
Installing under a countertop 62
Setting up the cabinet 62
For closets at room height 63

Contents

Product dimensions ... 63
Dimensions ... 63
Installation on a plinth ... 64
Washer-dryer stack ... 64
The Miele water protection system ... 65
Water intake ... 66
Drainage ... 67
Electrical connection ... 68

Technical data ... 69

Programmable functions ... 70
Choosing and selecting programmable functions ... 70
Editing and saving the programmable function ... 71
Exiting the programming level ... 71
P12 Buzzer ... 71
P13 Keypad tone ... 71
P14 PIN code ... 72
P22 Control panel switch-off status ... 72
P24 Memory ... 73
P25 Water inlet ... 73
P26 Additional long prewash – Normal ... 74
P28 Gentle action ... 74
P29 Reduce temperature ... 74
P32 Maximum rinse level ... 75
P33 Suds cooling ... 75
P34 Anti-crease ... 75
P49 Low water pressure ... 75
P55 Chlorine bleach ... 76
P62 Display brightness dimmed ... 76
P63 Welcome tone ... 76

Optional accessories ... 77
Detergent ... 77
Speciality detergents ... 77
Fabric care ... 78
Additive ... 78
Machine care ... 78

Important safety instructions

⚠ Warning

In order to reduce the risk of fire, electric shock, or injuries, persons operating the appliance must adhere to the following safety precautions:

▶ It is essential to read the operating instructions before using the washing machine.

▶ GROUNDING INSTRUCTIONS

The washing machine must be grounded. Connecting the appliance to ground reduces the danger of electric shock in the event of a malfunction. The grounding is a protective conductor which provides a path of least resistance for the current. The washing machine comes complete with a power cord and plug with the corresponding protective conductor. The power cord plug must be inserted into a suitable outlet that has been installed and grounded in compliance with all applicable local codes.

▶ WARNING: Incorrect grounding of the appliance will run the risk of electric shock. In case of doubt, get in touch with a qualified electrician and arrange to have your cabling inspected.

▶ Do not replace or make any changes to the plug supplied. If there is no suitable socket available, a socket must be installed by a qualified electrician.

▶ Do not use a damaged washing machine.

▶ Do not expose the washing machine to outdoor weather conditions.

▶ Do not install the washing machine in an area where there is a risk of freezing conditions. Frozen hoses may burst or split, and the reliability of the electronic control unit may be impaired at temperatures below freezing point.

▶ Before connecting the washing machine, make sure that the connection data on the data plate (voltage and connected load) match the domestic electricity supply. If in doubt, request the connection data from a qualified electrician.

▶ Do not connect the washing machine to the domestic electricity supply by a multi-socket adapter, extension lead or similar. These do not guarantee the required safety of the machine (fire hazard due to the risk of overheating).

▶ The washing machine is not intended for maritime applications or for use in mobile units such as motor homes or aircraft. However, installation in such scenarios may be possible under certain conditions. Get in touch with Miele's Technical Service department regarding these specific requirements.

▶ Do not make any changes or repairs on the washing machine if this is not expressly permitted in these operating instructions.

▶ Only Miele is permitted to replace a damaged power cord. Miele service technicians use original power cords from Miele.

▶ If hot-water systems are not used for longer than two weeks, there may be a buildup of hydrogen under certain conditions. HYDROGEN IS EXPLOSIVE. If the hot-water systems have not been in use for longer than two weeks, allow hot water to run from all valves for several minutes before operating the washing machine. This reduces the formation of hydrogen. Refrain from smoking and keep away from naked flames while the water valves are open. The gas will be flammable during this time.

▶ Remove the door or destroy the door lock before disposing of the washing machine.

Important safety instructions

Use

▶ Children are not allowed to play with, on, or inside the washing machine. If you are operating the washing machine in the presence of children, the children must be supervised at all times.

▶ The temperature of the porthole glass becomes very high during washing. Danger of burning! Refrain from touching the porthole glass. You must therefore keep children away from the porthole glass during the wash cycle.

▶ Only use the washing machine for washing fabrics with a care label stating that they are suitable for machine washing. Other applications may be dangerous.

▶ Do not wash any fabrics which have been cleaned, washed, or soaked with cleaning agents containing solvents (e.g. benzine) or other flammable substances. These fabrics release vapours which can ignite or explode. Do not add these kinds of fabric to a load of washing.

▶ Do not use any solvents or other flammable substances or explosive materials in the washing machine. These materials can release vapours which can ignite or explode.

▶ Never use solvent based cleaning agents on or in the washing machine. Surfaces are damaged on contact with cleaning agents.

▶ Always make sure that the drum is stationary before reaching in to remove laundry. Do not touch the drum whilst it is still rotating.

▶ Do not make any alterations to the machine.

KEEP THESE OPERATING INSTRUCTIONS IN A SAFE PLACE

▶ Miele tumble dryers and Miele washing machines can be installed as a washer-dryer stack. A Miele washer-dryer connection kit is required as an optional accessory for this. Please ensure that the washer-dryer connection kit is suitable for the Miele tumble dryer and the Miele washing machine.

▶ If installing the machine on a Miele plinth (available as an optional accessory), please make sure you order the correct one for this washing machine.

▶ Should detergent enter the eyes, rinse out immediately with plenty of lukewarm water. If accidentally ingested, seek medical advice immediately. People who have sustained damage to the skin or who have sensitive skin should avoid contact with the detergent.

▶ The maximum dry laundry weight is 17.6 lb (8 kg). See the “Program chart” for the maximum recommended loads for individual programs.

▶ This product may contain chemicals know to the state of California to cause cancer or birth defects or other reproductive harm.

Important safety instructions

FCC Declaration of Conformity

▶ These devices comply with FCC Rules Part 15. This equipment has been tested and found to be in compliance with the limits for a Class B digital device, pursuant to Part 15 of the FCC Rules of Operation and is subject to the following conditions:
These devices may not cause harmful interference.
These devices must accept any interference received, including interference that may cause undesired operation.

FCC Radiation Exposure Statement

▶ This equipment complies with FCC radiation exposure limits set forth for an uncontrolled environment. This equipment should be installed and operated with minimum distance 8“ (20 cm) between the radiator and your body.

Industry Canada Statement

▶ This digital apparatus does not exceed the Class B limits for Radio Noise Emissions from digital apparatus set out in the Radio Interference Regulations of the Canadian Department of Communications.

Complies with Canadian ICES-003 Class B specifications.

Control panel

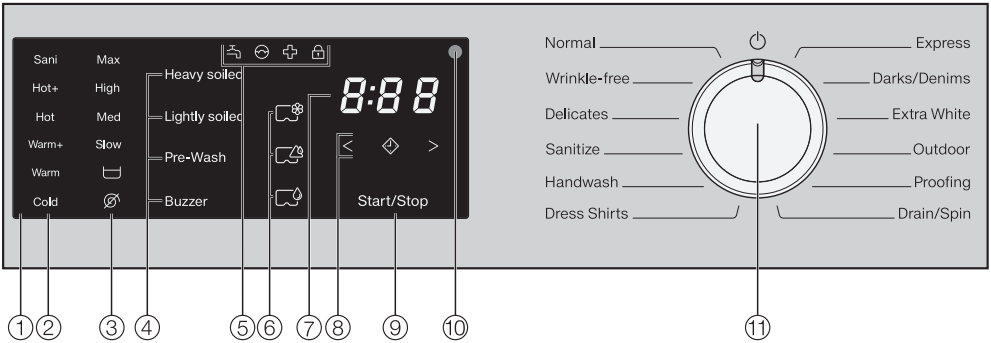

① **Control panel**

② **Temperature sensor buttons**
for selecting the temperature.

③ **Spin speed sensor buttons**
for selecting the spin speed.

④ **Sensor buttons for extra options**
for the various extra options that can be added to the wash programs.

⑤ **Indicator lights**
light up when necessary

⑥ **CapDosing sensor buttons**

⑦ **Time display**
for the program duration

⑧ **Sensor buttons** < >
for the Delay start function

⑨ ***Start*/*Stop* sensor button**
for program start/cancellation

⑩ **Optical interface**
for service technicians

⑪ **Program selector**
for selecting programs and for switching off. The washing machine is switched on by selecting a program, and switched off by turning the program selector to the position.

How the control panel works

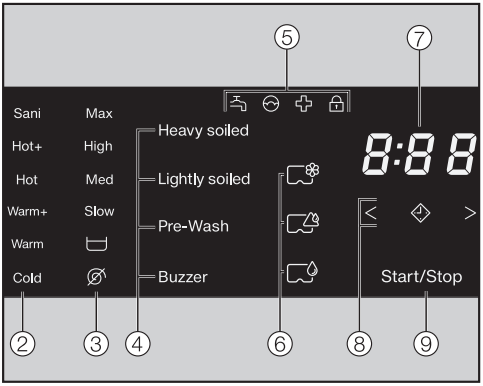

The ②, ③, ④, ⑥, ⑧, and ⑨ sensor buttons react to fingertip contact. Selection is possible as long as the respective sensor button is lit.

If a sensor button is brightly lit, this means it is currently selected

If a sensor button is dimly lit, this means it can be selected

② and ③ sensor buttons for temperature and spin speed

After a wash program has been selected with the program selector, the recommended temperature (in °C) and spin speed (in rpm) light up brightly.

Selectable temperatures and spin speeds light up dimly.

④ Sensor buttons for extra options

You can supplement the wash programs with extra options.

If a wash program has been selected, the sensor buttons for the possible extra options light up dimly.

⑤ Indicator lights

– lights up if there are faults affecting the water inlet and drainage

– lights up if excess detergent was used

– lights up as a reminder about hygiene information

– flashes for as long as it is possible to add laundry
lights up when the door of the washing machine is locked

⑥ CapDosing

The CapDosing sensor buttons are used for activating cap dosing.

– Fabric care (e.g. fabric softener, proofing agent)

– Additives (e.g. detergent enhancers)

– Detergent (for the main wash only)

⑦ Time display

After the program has started, the program duration will appear on the display in hours and minutes.

When Delay start is being used, the program duration will appear after the Delay start time has elapsed.

⑧ Sensor buttons < ◇ >

– ◇
After touching the ◇ sensor button, a later start time for the program (Delay start) can be selected. Once selected, ◇ lights up brightly.

– < >
The duration of the Delay start period is selected by touching the < or > sensor button.

The Delay start time selected will appear in the time display.

After the program has started, the Delay start time will begin to count down.

Once the Delay start time has elapsed, the program begins and the estimated program duration appears on the time display.

⑨ Start/Stop sensor button

Touching the *Start*/*Stop* sensor button starts the selected program or cancels a program that has already been started. The sensor button flashes slowly as soon as it is possible for a program to be started and then lights up constantly after the program has started.

⚠ Damage from incorrect installation and connection.
Installing and connecting the washing machine incorrectly will cause serious damage to property.
See “Installation”.

Removing the protective foil and stickers

■ Remove:

– The protective foil from the door

– Any stickers (if present) from the front and the lid

Please do not remove any labels (e.g. the data plate) which are visible when you open the door.

Remove the drain hose elbow from the drum

An elbow piece for the drain hose is stored in the drum.

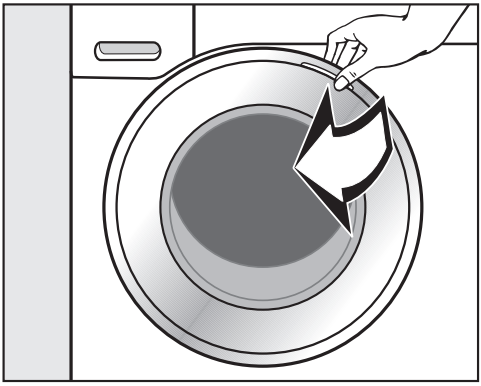

■ Pull open the door.

■ Remove the elbow piece.

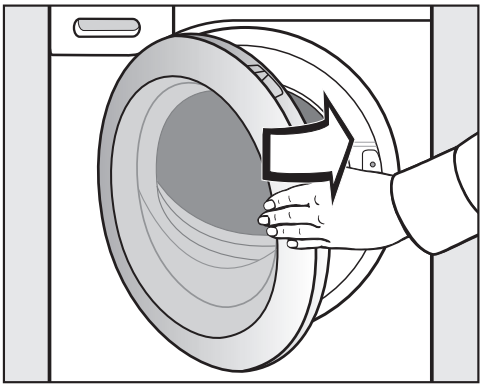

■ Shut the door with a gentle swing.

This washing machine has undergone a complete functional test at the factory and some residual water will therefore remain in the drum from this process.

For safety reasons, spinning is not possible until the machine has been prepared for use for the first time. To activate the spinning function, you must run a wash program without laundry and without detergent.

Using detergent could result in an excessive build-up of foam!

The ball valve is activated at the same time. The ball valve prevents detergent escaping from the suds container into the sump during a wash program, thus making maximum use of the detergent.

Running the first program

■ Turn on the tap.

■ Turn the program selector to *Normal*.

The washing machine is now switched on and the temperature *hot+* lights up on the control panel.

■ Touch the *Start*/*Stop* sensor button.

The program starts and the 🔒 symbol lights up on the control panel.

After 10 minutes, the indicators dim and the *Start*/*Stop* sensor button starts flashing.

At the end of the program

At the end of the program, the Anti-crease function is switched on. The 🔒 symbol lights up on the control panel, *0:00* appears on the time display, and the drum occasionally rotates.

■ Touch the *Start*/*Stop* sensor button.

The door will be unlocked.

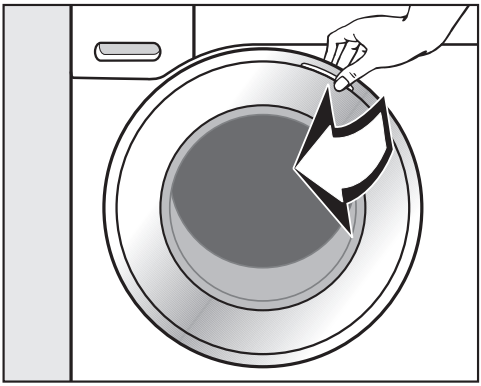

■ Reach under the recessed grip and pull the door open.

Useful tip: Leave the door slightly open to allow the drum to dry.

■ When the program has ended, turn the program selector to ⏻.

The washing machine is switched off again and is now ready for use.

Energy savings

– 10 minutes after the beginning of the Anti-crease phase, the indicators dim and the *Start*/*Stop* sensor button starts flashing.

– 15 minutes after completion of the Anti-crease phase, the washing machine switches off completely and the door lock is released.

Environmentally friendly washing

Energy and water consumption

– To get the most out of your machine, load the maximum dry load for the program you are using.
The energy and water consumption will then be the lowest in relation to the size of the load.

– When smaller amounts of laundry are washed, the automatic load recognition system will reduce the amount of water and energy used.

– Use the *Express* program for smaller, lightly soiled loads.

– Modern detergents make it possible to wash at lower temperatures (e.g. *20°C*). Using the corresponding temperature settings will save energy.

– To maintain the hygiene of the machine, carry out a hot wash above 60°C at regular intervals. The ✣ indicator will come on to remind you to carry out a hot wash.

Detergent consumption

– Do not exceed the amounts of detergent recommended on the packaging.

– Adjust the dosage to the level of soiling of the laundry.

– Reduce the amount of detergent with smaller loads (approx. ⅓ less than the amount recommended can be used when washing a half load).

When drying with a tumble dryer

Select the highest possible spin speed for the wash program to save energy in the subsequent tumble dryer cycle.

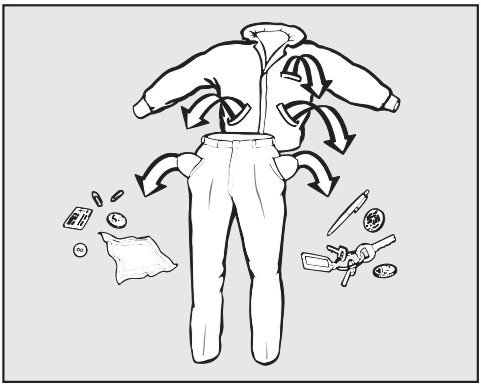

■ Empty all pockets.

⚠ Damage due to foreign objects.
Nails, coins, paper clips, and so on can cause damage to garments and components in the machine.
Check the laundry before washing and remove any such foreign objects.

Sorting the laundry

■ Sort the laundry by colour and by care label. Most garments have a fabric care label in the collar or side seam.

Useful tip: Dark fabrics often contain excess dye and should be washed separately several times before being included in a mixed load. Wash light and dark coloured items separately.

Pre-treating stains

■ Badly soiled areas and stains should be cleaned as soon as possible, preferably whilst still fresh. Stains should be carefully dabbed off using a soft, colourfast cloth. Do not rub!

Useful tip: Stains (e.g. blood, egg, coffee, tea) can be pre-treated using some handy tricks which can be found in the Miele guide to laundry care. Please contact Miele directly or submit a request via Internet page to obtain or view a copy of this manual.

⚠ Damage due to solvent-based cleaning agents.
Cleaning agents containing benzine, stain remover, etc., can damage plastic parts.
When pre-treating a stain, make sure that plastic parts do not come into contact with cleaning agents.

⚠ Risk of explosion due to solvent-based cleaning agents.
When using solvent-based cleaning agents, an explosive mixture may develop.
Never use solvent-based cleaning agents in the washing machine.

General tips

– Curtains: Remove lead weights first or place in a laundry bag.
– Remove or sew in any loose underwiring in bras or shirt collar stiffeners.
– Close any zips, attach Velcro fasteners, fasten hooks and eyes etc. before washing.
– Fasten duvet covers and pillow cases to prevent small items from being rolled up inside them.

Do not wash any items in this machine which are specified by the manufacturer as **not washable** on the care label (symbol).

2. Loading the washing machine

Opening the door

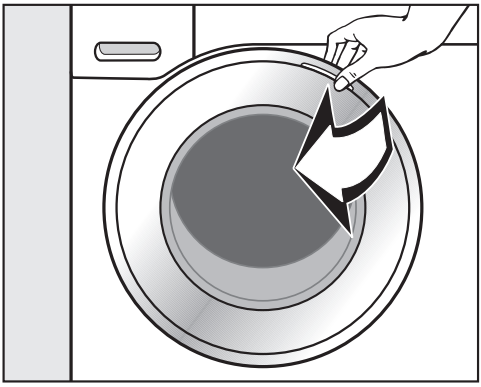

■ Take hold of the door and pull it open.

Check the drum for pets or foreign objects before loading it with laundry.

The most efficient use of energy and water is achieved when a full load is washed. However, do not overload as this reduces cleaning efficiency and causes creasing.

■ Unfold the laundry and load loosely in the drum.

Mixing both large and small items gives better wash results and also helps distribute the load evenly during spinning.

Useful tip: Please note the maximum load for different wash programs.

Closing the door

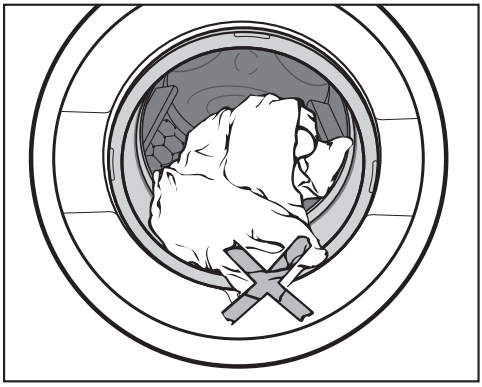

■ Make sure that no items are caught between the door and the seal.

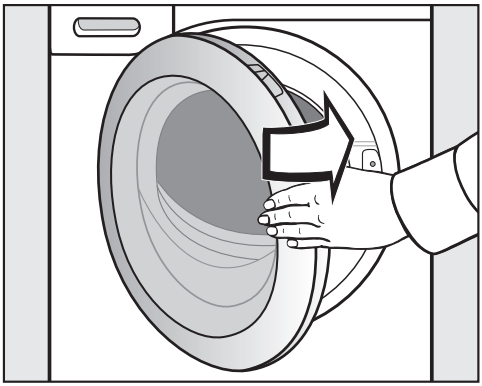

■ Shut the door with a gentle swing.

Program selection

The washing machine is switched on by turning the program selector to a wash program.

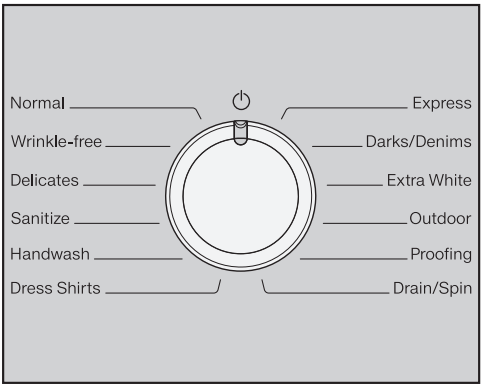

- Turn the program selector to the required program.

The estimated wash time is shown on the time display and the pre-set temperature and spin speed light up on the control panel.

Selecting a temperature and spin speed

The wash program's pre-set temperature and spin speed light up brightly. The choice of temperatures and spin speeds selectable for the wash program light up dimly.

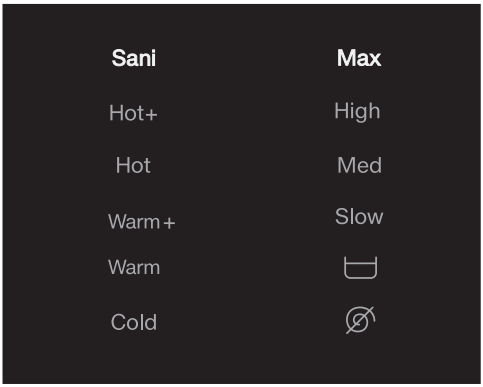

- Touch the sensor button for the temperature desired. It will then light up brightly.
- Touch the sensor button for the spin speed desired. It will then light up brightly.

3. Selecting a program

Selecting extra options

The selection of extra options available for the wash program lights up dimly.

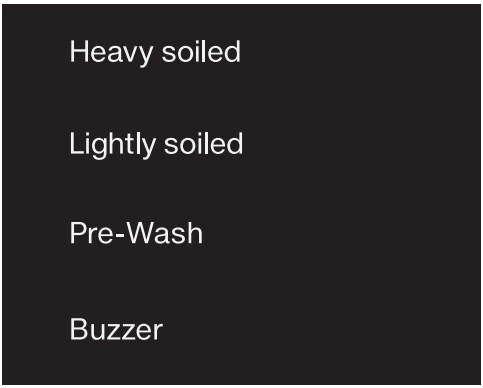

- Touch the sensor button for the required extra option. It will then light up brightly.

Useful tip: You can select multiple extra options for a wash program.

Please refer to “Extra options” for more information.

Detergent dispenser drawer

This washing machine requires particularly efficient detergent. Adhere strictly to the dispensing amounts supplied by the detergent manufacturer. The detergents must be marked with the following label:

Filling with detergent

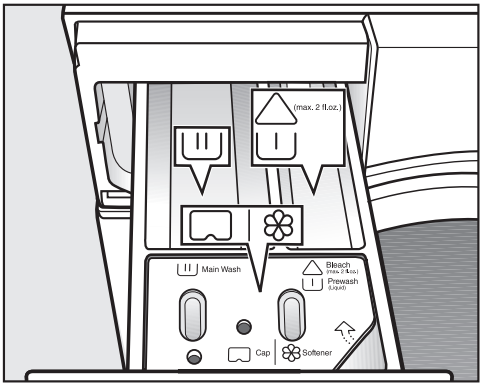

- Pull out the detergent drawer and add detergents to the compartments.

△ Chlorine bleach for removing stains or liquid detergent for the pre-wash

Detergent for the main wash and soaking

❀ Fabric softener, liquid starch, or capsules

Tips for dispensing

Adjust the detergent dosage to the level of soiling of the laundry and the maximum load. Reduce the amount of detergent with smaller loads (e.g. reduce the amount of detergent by ⅓ when washing a half load).

Too little detergent:

– The laundry is not cleaned properly and may become grey and hard to the touch over time.

– Can lead to a build-up of mold in the washing machine.

– Grease is not completely removed from the laundry.

– Can lead to limescale deposits on the heater elements.

Too much detergent

– Poor wash, rinse, and spin results.

– Causes higher water consumption as an extra rinse cycle is automatically activated.

– A greater burden on the environment.

Dispensing aids

Use dispensing aids (e.g. balls) if these are supplied with the detergent, particularly when using liquid detergent.

4. Adding detergent

Using chlorine bleach

⚠ Damage due to chlorine bleach.
Textiles may be discoloured or their fibres damaged.
Only use chlorine bleach on suitable fabrics.

Chlorination **must** be activated in the programmable functions before chlorine bleach is first used.

Chlorine bleach may be used in the following programs:

– Normal
– Wrinkle-free
– SaniWash
– Dress Shirts
– Extra White

Dispensing chlorine bleach

Follow the manufacturer's instructions on the packaging.

The extra option *pre-wash* must **not** be selected.

■ Pour **max. 60 ml** of chlorine bleach into the △ II chamber.

The chlorine bleach is added automatically 10 minutes before the end of the main wash.

Using powder detergent

The detergent dispenser drawer contains an insert for liquid detergent in the II compartment as standard. This insert must be removed to use powder detergent.

It is **not possible** to use powder detergent in the △ II compartment.

A pre-wash cannot be carried out when using powder detergent.

■ Remove the detergent dispenser drawer.

■ Remove the insert for liquid detergents from the II compartment.

Useful tip: Reinsert the insert into the detergent dispenser drawer before next using liquid detergent.

Using detergent tablets or pods

Always put detergent tablets or pods directly in the drum with the laundry. They cannot be added via the detergent dispenser drawer.

Using fabric softener and liquid starch

Fabric softeners
make garments soft to handle and help prevent static cling when tumble drying.

Liquid starch
is synthetic and provides good stiffness to fabric.

Natural starch
stiffens and gives body to fabric.

Adding fabric softener

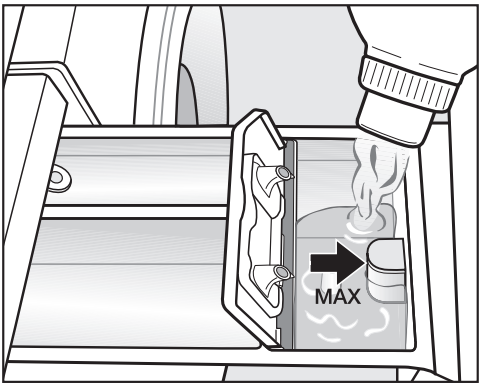

- Add the fabric softener or the liquid starch to the ❀ compartment. **Do not exceed the maximum level mark.**

It will be automatically dispensed in the final rinse cycle. At the end of the program a small amount of water remains in the ❀ compartment.

If starching frequently, clean the dispenser compartment, especially the siphon tube, regularly.

CapDosing

Three different types of capsule are available:

❀ = Fabric care (e.g. fabric softener, proofing agent)

= Additives (e.g. detergent enhancers)

= Detergent (for the main wash only)

Each capsule contains the correct amount for one wash cycle.

Capsules are available to order from Miele's online shop, Miele's customer service, or from your Miele dealer.

⚠ Capsules pose a health risk.
The ingredients of capsules can be hazardous to health if they are swallowed or come into contact with skin.
Keep capsules out of the reach of children.

Activating CapDosing

- Touch the sensor button for the capsule you want to use.

Sensor button		Cap
	for	❀
	for	
	for	

4. Adding detergent

Inserting a capsule

■ Open the detergent dispenser drawer.

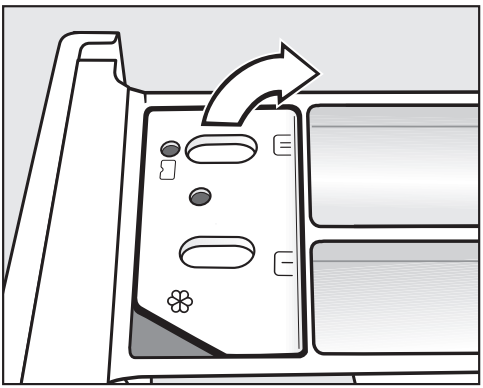

■ Open the lid of the ❀/ ▭ compartment.

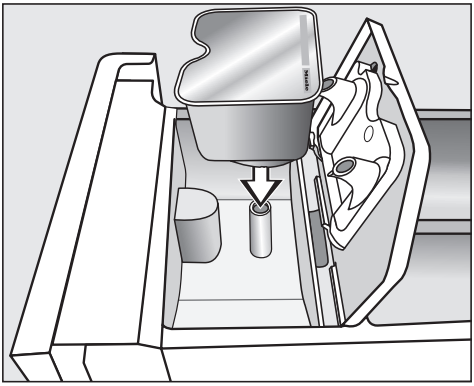

■ Press the capsule in firmly.

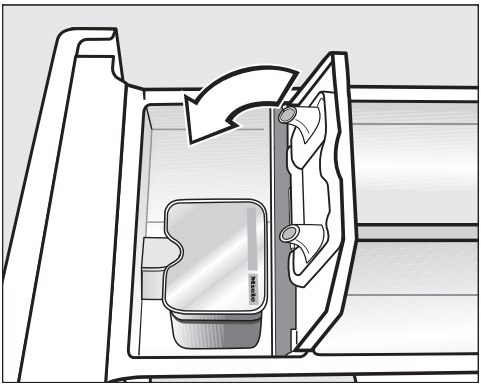

■ Close the lid and press it firmly shut.

■ Close the detergent dispenser drawer.

The capsule is opened by the act of inserting it in the detergent dispenser drawer. The contents can run out of the capsule if you then remove it from the drawer before it is used. Dispose of opened capsules.

The contents of the capsule will be added to the wash program at the correct time.

During CapDosing, water intake to the ❀ compartment is solely via the capsule.
Do not add any additional fabric softener to the ❀ compartment.

- Remove the empty capsule at the end of the wash program.

For technical reasons, a small amount of water will remain in the capsule.

Switching off/Changing CapDosing

- In order to switch off CapDosing, touch the brightly lit sensor button.
- In order to change CapDosing, touch one of the other capsule sensor buttons.

Colour run and dye removers/ dyes

⚠ Damage due to colour run/dye removers.
Colour run and dye removers can cause corrosion in the washing machine.
Do not use colour run or dye removers in this washing machine.

Dyes suitable for use in domestic washing machines can be used. However, please note that the salt used in the dyeing process can cause corrosion to stainless steel components in the machine if you use dye frequently. Always observe the dye manufacturer's instructions carefully.

Starting a program

■ Touch the flashing *Start*/*Stop* sensor button.

The door will lock and the program will start.

– As long as the 🔒 symbol is flashing on the control panel, you can add laundry.

– When the 🔒 symbol lights up constantly, the door is locked until the end of the program.

If a Delay start time has been selected, this will count down on the time display. At the end of the Delay start time or immediately after the program has started, the program duration will appear in the time display.

Energy savings

After 10 minutes, the indicators dim. The *Start*/*Stop* sensor button will flash slowly.

You can reactivate the indicators:

■ Touch the *Start*/*Stop* sensor button (this does not have any effect on a running program).

Program end

The time display shows *0:00*. The 🔒 symbol will remain lit up in the control panel. The door is locked in the Anti-crease phase.

■ Touch the *Start*/*Stop* sensor button.

The door unlocks and the 🔒 symbol on the control panel goes out.

■ Pull open the door.

■ Remove the laundry.

Energy savings

– 10 minutes after the beginning of the Anti-crease phase, the indicators dim and the *Start*/*Stop* sensor button starts flashing.

– 15 minutes after completion of the Anti-crease phase, the washing machine switches off completely and the door lock is released.

Items left in the drum could discolour other items in the next wash or become discoloured themselves.
Remove all items from the drum.

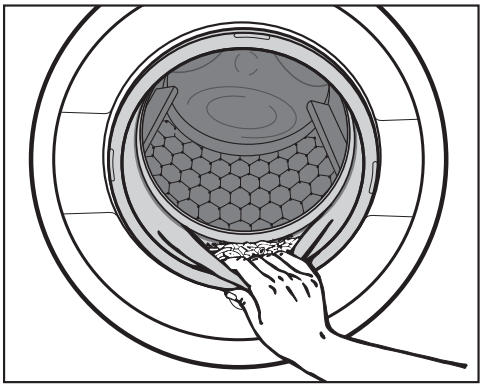

■ Check the folds in the door seal for any small articles.

Useful tip: Leave the door slightly open to allow the drum to dry.

■ Turn the program selector to the ⏻ position. This switches the washing machine off.

■ If applicable, remove the used capsule from the detergent dispenser drawer.

Useful tip: Leave the detergent dispenser drawer slightly open to allow it to dry.

Spinning

Final spin speeds

Program	Selectable spin speeds					
	Max.	High	Med	Slow	D	⊗
Normal	✓	–	–	–	X	X
Wrinkle-free	–	✓	X	X	X	X
Delicates	–	–	✓	X	X	X
Sanitize	✓	X	–	–	X	X
Handwash	–	✓	X	X	X	X
Dress Shirts	–	–	✓	X	X	X
Express	–	✓	X	X	X	X
Darks/Denims	–	✓	X	X	X	X
Extra White	✓	X	–	–	X	X
Outdoor	–	–	✓	X	X	X
Proofing	–	X	✓	X	X	X
Drain/Spin	✓	X	X	X	–	X

✓ = Optimum spin speed for program is pre-set

X = Can be selected – = Cannot be selected

Final spin speed in the wash program

When a program is selected, the sensor button for the optimum spin speed for that program will be brightly lit up on the control panel

A faster spin speed can be selected for certain wash programs.

The highest selectable spin speed is indicated in the table.

Omitting the final spin (Rinse hold)

■ Touch the sensor button (Rinse hold).

The laundry is not spun after the final rinse and remains in the rinse water. This helps prevent creasing if the laundry is not going to be removed from the drum immediately after the end of the program.

After the end of a program

The sensor button for the optimum spin speed lights up on the control panel. You can change the spin speed. The *Start*/*Stop* sensor button will flash slowly.

■ To start the final spin:
Touch the flashing *Start*/*Stop* sensor button **once**.

The final spin is carried out.

■ To end the program:
Touch the flashing *Start*/*Stop* sensor button **twice**.

The water will be pumped away.

Deselecting the rinse-spin and final spin

■ Touch the sensor button.

After the final rinse cycle, the water will be pumped away and the Anti-crease phase will switch on.

An Extra Rinse cycle is carried out with this setting for certain wash programs.

Rinse-spin

There is a spin cycle after the main wash and between the rinse cycles. A reduction in the final spin speed will also reduce the interim spin speed as appropriate. If a spin speed of less than 700 rpm is selected for the *Normal* program, an Extra Rinse phase is carried out.

Delay start

With Delay start, you can delay the start of a program from 30 minutes up to a maximum of 24 hours. This allows you to make use of night-time economy electricity rates, for example.

Selecting Delay start

Delay start cannot be selected in the *Drain*/*Spin* or *Proofing* programs.

- Select the program required.
- Touch the ◈ sensor button.

The ◈ sensor button lights up brightly.

- Touch the < or > sensor button repeatedly until the required Delay start time appears on the time display.

– In the case of settings below 10 hours, the Delay start time changes in increments of 30 minutes

– In the case of settings above 10 hours, the Delay start time changes in increments of 1 hour

Starting Delay start

- Touch the flashing *Start*/*Stop* sensor button.

The Delay start process starts and counts down on the time display.

Altering Delay start

- Touch the *Start*/*Stop* sensor button.

The Delay start process stops and the 🔒 symbol on the control panel goes out.

- Touch the < or > sensor button repeatedly until the required Delay start time appears on the time display.
- Touch the flashing *Start*/*Stop* sensor button.

Cancelling Delay start

- Touch the *Start*/*Stop* sensor button.

The Delay start process stops and the 🔒 symbol on the control panel goes out.

- Touch the brightly lit ◈ sensor button.

Delay start is cancelled and the ◈ sensor button goes out. The program duration appears on the time display.

- Touch the flashing *Start*/*Stop* sensor button in order to start the wash program.

Temperature with garment care label symbols			**Item/Tip**
Normal			**Full load** (17.6 lb/8 kg)
Hot+	140°F/60°C		Cotton, linen, and mixed fibre fabrics made of both cotton and linen.
Hot	120°F/50°C		
Warm+ ✓	105°F/40°C		
Warm	85°F/30°C		
Cold	Cold		
USA test program in accordance with: DOE Federal Register 10 CFR Part 430 Appendix J2 to subpart B **Canada test program in accordance with:** CAN/CSA-C360-13			
Wrinkle-free			**Half load** (8.8 lb/4 kg)
Hot+	140°F/60°C		Synthetic or mixed fibre fabric, or wrinkle-free cotton.
Hot	120°F/50°C		
Warm+ ✓	105°F/40°C		
Warm	85°F/30°C		
Cold	Cold		
Delicates			**Small load** (6.6 lb/3 kg)
Hot+	140°F/60°C		For delicate fabrics made from synthetic fibres.
Hot	120°F/50°C		
Warm+ ✓	105°F/40°C		
Warm	85°F/30°C		
Cold	Cold		
Sanitize			**Full load** (17.6 lb/8 kg)
Sani ✓	170°F/75°C		Cotton or linen fabrics with direct skin contact or for which special hygiene requirements apply.

Program chart

Temperature with garment care label symbols			Item/Tip
Handwash			**Small load** (4.4 lb/2 kg)
Warm+ ✓	105°F/40°C		For delicate fabrics which are only suitable for hand washing.
Warm	85°F/30°C		
Cold	Cold		
Dress Shirts			**Small load** (4.4 lb/2 kg)
Hot+	140°F/60°C		Pre-treat collars and cuffs depending on the level of soiling. Wash dress shirts and silk blouses in the *Delicates* program.
Hot	120°F/50°C		
Warm+ ✓	105°F/40°C		
Warm	85°F/30°C		
Cold	Cold		
Express			**Half load** (7.7 lb/3.5 kg)
Warm+	105°F/40°C		Cotton fabrics that have hardly been worn or are only very lightly soiled. Selecting the *Lightly soiled* extra option will reduce the washing time by 10 minutes.
Warm ✓	85°F/30°C		
Cold	Cold		
Darks/Denims			**Small load** (4.4 lb/2 kg)
Warm+ ✓	105°F/40°C		Black and dark garments made from cotton, mixed fibres, and denim. – Wash inside out. – Denim often contains excess dye and may run during the first few washes. Therefore, wash light and coloured items separately.
Warm	85°F/30°C		
Cold	Cold		

Temperature with garment care label symbols			Item/Tip
Extra White			**Full load** (17.6 lb/8 kg)
Hot+ ✓	140°F/60°C		For white fabrics made of cotton or linen without special hygiene requirements.
Outdoor			**Small load** (5.5 lb/2.5 kg)
Warm+ ✓	105°F/40°C		Performance outerwear (e.g. jackets and trousers) made from membrane fabric such as Gore-Tex®, SYMPATEX®, WINDSTOPPER®, etc. – Zip up or close any jackets with Velcro before washing. – Do not use fabric softener. – If required, these garments can also be re-proofed using the *Proofing* program. Proofing after each wash cycle is not recommended.
Warm	85°F/30°C		
Cold	Cold		
Proofing			**Small load** (5.5 lb/2.5 kg)
Warm+ ✓	105°F/40°C		Treating microfibre fabric, ski wear, or table linens made from mainly synthetic fibres to provide a finish which is resistant to water and dirt. – The items should be freshly laundered and spun or dried before proofing. – For best results, the items should be heat-treated afterwards. This can be achieved by drying them in the tumble dryer or ironing them.
Drain/Spin			**Full load** (17.6 lb/8 kg)
Cold			– Drain only: Set spin speed to ⌀. – Make sure you select the appropriate spin speed.

Extra options

You can supplement the wash programs with extra options.

Extra options are selected and deselected using the relevant sensor buttons on the control panel.

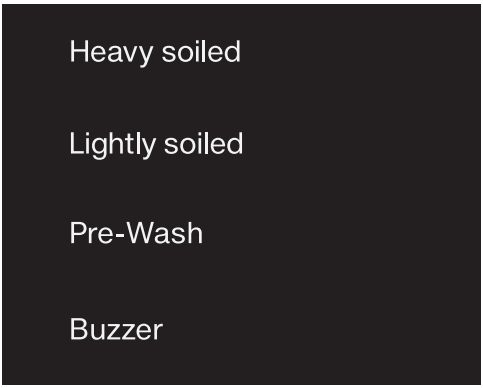

- Touch the sensor button for the extra option you require.

The relevant button will light up brightly.

Not all the extra options can be used with every program.

An extra option that is not permitted for the wash program is not lit dimly and cannot be activated by touch.

Heavy soiling

For laundry that is very heavily soiled. The extended wash duration enhances the stain-removing effect.

Light soiling

For slightly soiled textiles that are not stained. The wash duration is reduced.

Prewash

For laundry with large amounts of dirt, e.g. dust and sand.

Buzzer

A buzzer sounds at the end of the program. The buzzer sounds until the washing machine is switched off. The volume of the buzzer can be changed, see “Settings – Buzzer”.

The following extra options can be selected in addition to the programs

	Heavy soiling	Light soiling	Prewash	Buzzer
Normal	X	X	X	X
Wrinkle-free	X	X	X	X
Delicates	X	X	X	X
Sanitize	X	X	X	X
Handwash	–	X	–	X
Dress Shirts	X	X	X	X
Express	–	X	–	X
Darks/Denims	X	X	X	X
Extra White	X	X	X	X
Outdoor	X	X	X	X
Proofing	–	–	–	X
Drain/Spin	–	–	–	X

X = Can be selected

– = Cannot be selected

Changing the program sequence

Changing the program

After the successful start of a program it is no longer possible to select a different program.

If you would like to change the program, you have to cancel the program.

Cancelling a program

You can cancel a program at any time after it has started.

- Touch and hold the *Start*/*Stop* sensor button until the time display switches to *0:00*.

The water will be pumped away. As soon as the 🔒 symbol on the control panel goes out, the program has been cancelled.

- Open the door.

Selecting a different program after cancelling the program

- Close the door.
- Check that there is still detergent in the dispenser drawer. Add more detergent if necessary.
- Turn the program selector to the program you want and start it by touching the *Start*/*Stop* sensor button.

Removing laundry after cancelling the program

If you want to remove the laundry when it is dripping wet:

- Open the door.
- Remove the laundry.

If you want to remove the laundry after it has been spun (damp):

- Open the door.
- Close the door.
- Turn the program selector to *Drain*/*Spin*.

Useful tip: Select an appropriate spin speed.

Interrupting a program

- Turn the program selector to the ⏻ position.

The washing machine switches off.

- To continue, turn the program selector to the position of the wash program that was started.

Useful tip: If *-0-* appears on the time display, the program selector is in the incorrect position.

Adding or removing laundry

You can add or remove laundry at the start of a wash program as long as the 🔒 symbol is flashing on the control panel.

- Briefly touch the *Start*/*Stop* button.

The program will stop and the door will unlock.

- Pull open the door.
- Add or remove items.
- Close the door.
- Touch the *Start*/*Stop* sensor button.

The wash program will continue.

Detergent

Miele-recommended detergents

Miele detergents have been developed by Miele especially for Miele washing machines. You can order the Miele detergents from Miele's online store, Miele Experience Centers, or you can purchase them from Miele's customer service.

	Miele UltraWhite	Miele UltraColor	Miele capsule	Miele capsule	Miele capsule
Normal	✓	✓	–	Ⓕ	Ⓗ
Wrinkle-free	–	✓	–	Ⓕ	Ⓗ
Delicates	–	✓	Ⓐ, Ⓑ, Ⓒ	Ⓕ	–
Sanitize	✓	–	–	Ⓕ	Ⓗ
Handwash	–	–	Ⓑ, Ⓓ, Ⓔ	Ⓕ	–
Dress Shirts	✓	✓	–	Ⓕ	Ⓗ
Express	–	✓	–	Ⓕ	–
Darks/Denims	–	✓	–	Ⓕ	–
Extra White	✓	✓	–	Ⓕ	Ⓗ
Outdoor	–	–	Ⓒ	–	–
Proofing	–	–	–	Ⓖ	–

✓ Recommended
– Not recommended

Ⓐ Sport
Ⓑ Downs
Ⓒ Outdoor
Ⓓ WoolCare
Ⓔ SilkCare
Ⓕ Fabric softener
Ⓖ Proofing
Ⓗ Booster

General detergent recommendations

The wash programs that are not listed do not have a detergent recommendation

	Universal detergent	Colour detergent	Detergent for woollens and delicates	Bleach
Normal	✓	✓	–	✓
Wrinkle-free	✓	✓	–	✓
Delicates	–	✓	✓	–
Sanitize	✓	✓	–	✓
Handwash	–	–	✓	–
Dress Shirts	✓	✓	–	✓
Express	–	✓[1)]	–	–
Darks/Denims	–	✓	✓	–
Extra White	✓	–	–	✓
Outdoor	–	–	✓	–

✓ Recommended

– Not recommended

1) Liquid detergent

Cleaning the drum (Hygiene info)

Washing at low temperatures and/or using liquid detergent can cause bacteria and unpleasant odours to build up in the washing machine. Use the *Sanitize* program with temperature *Sani* to clean the machine. This should be done at the latest when the indicator light ✣ comes on.

Cleaning the housing and control panel

⚠ Risk of electric shock.
Voltage is present when the washing machine is switched off
Disconnect the machine from the electricity supply before cleaning or maintenance.

⚠ Risk of damage due to ingress of water.
The pressure of a water jet can cause water to get into the washing machine, resulting in damage to components.
Do not spray the washing machine with a water jet.

- Clean the housing and control panel with a mild cleaning agent or soap and water and dry both with a soft cloth.
- The drum can be cleaned using a suitable stainless steel cleaning agent following the manufacturer's instructions on the packaging.

⚠ Damage due to cleaning agents.
Solvent-based cleaning agents, abrasive cleaners, glass cleaners or multi-purpose cleaning agents can cause damage to plastic surfaces and other parts.
Do not use any of these cleaning agents.

Cleaning the detergent dispensing drawer

Washing at low temperatures and the use of liquid detergent can lead to a build-up of bacteria in the detergent dispenser drawer.

- For hygiene reasons, clean the entire drawer at regular intervals.

Removing the detergent dispenser drawer

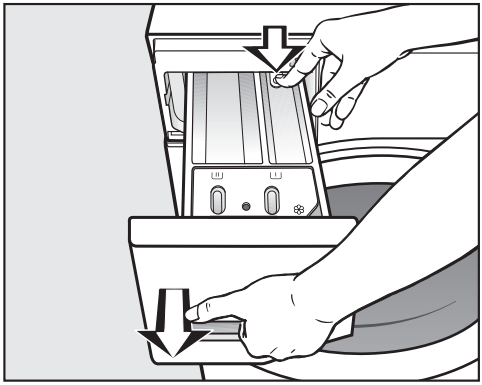

- Pull out the detergent dispenser drawer until a resistance is felt. Press down the release button and at the same time pull the drawer right out of the machine.

Removing and cleaning the insert for liquid detergents

An insert for liquid detergents is located in the II compartment of the detergent dispenser drawer.

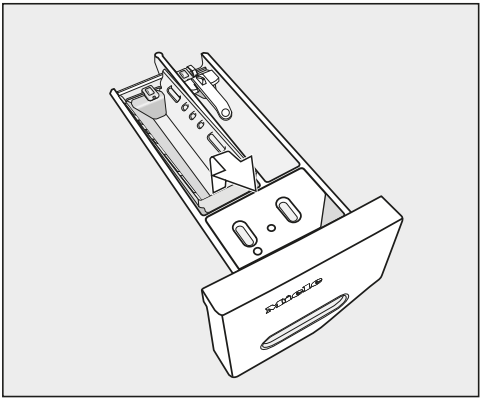

- Remove the insert. Clean the insert thoroughly with warm water.

Cleaning the △I compartment

Compartment 1 has a siphon for better dispensing of the chlorine bleach.

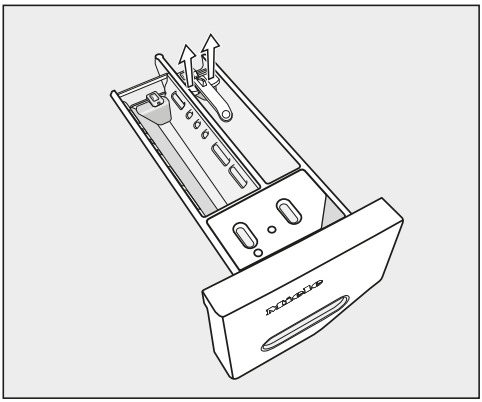

- Remove the release catch.

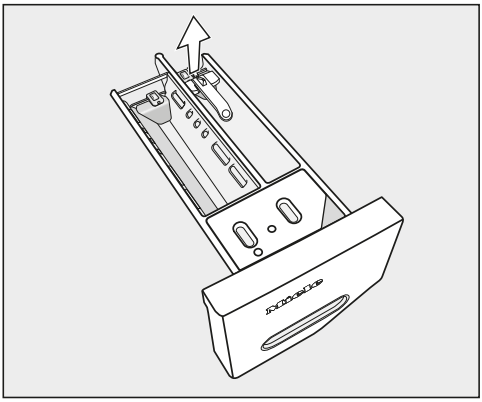

- Remove and clean the siphon.
- Clean the △I and II compartments with warm water.

Cleaning the siphon and the ❀/ ▭ compartment channel

Liquid starch results in clogging. The siphon in the ❀/▭ compartment no longer works and the compartment can overflow.

Clean the siphon particularly thoroughly after using liquid starch a few times.

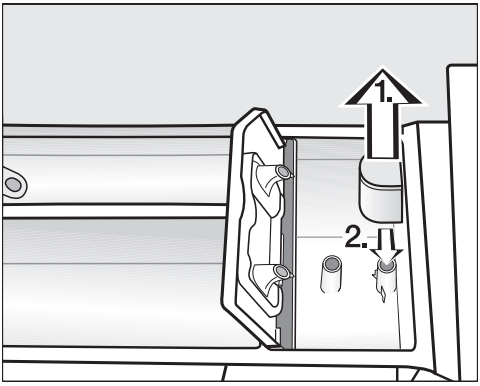

1. Remove the siphon from the ❀ compartment and clean under warm running water. Clean the siphon tube in the same way.
2. Refit the siphon.

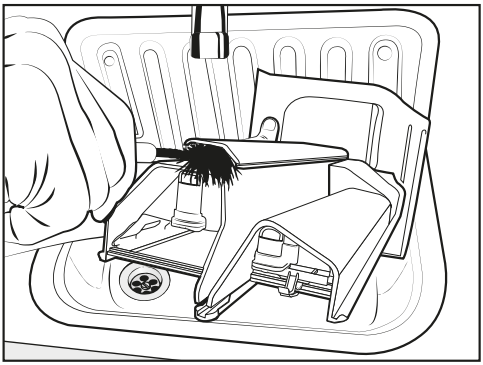

- Clean the fabric softener channel with a brush and warm water.

Cleaning the detergent dispenser drawer housing

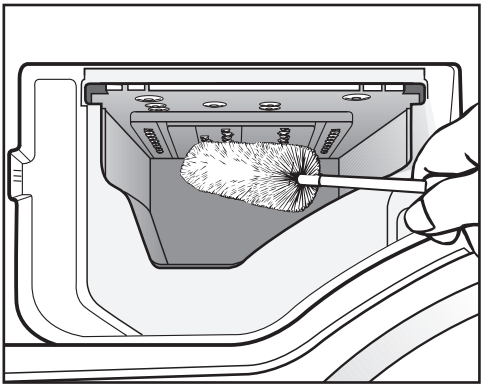

- Use a bottle brush to remove detergent residues and limescale from the jets inside the detergent dispenser drawer housing.

Cleaning the water inlet filter

The washing machine has two filters to protect the inlet valve. You should inspect the filters approximately every six months, or more often if there are frequent interruptions to the external water supply.

Cleaning the filter in the inlet hose

- First turn off the tap.
- Unscrew the inlet hose from the tap.

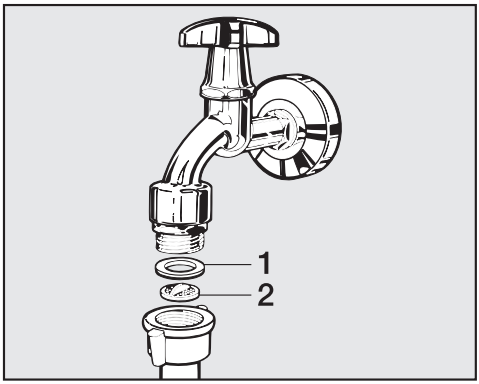

- Remove the rubber seal **1** from the connector.
- Using needle nose pliers, take hold of the plastic filter bar **2** and remove it.
- Clean the filter.
- Reassemble the appliance in reverse order.

Cleaning the filter in the inlet valve

- Using pliers, carefully loosen the ribbed plastic nut on the inlet valve and unscrew.

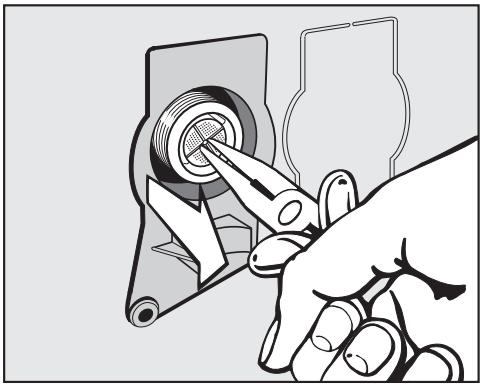

- Use needle nose pliers to withdraw the filter by the bar.
- Clean the filter.
- Reassemble the appliance in reverse order.

After cleaning, turn the tap slowly and make sure the screw connections are watertight. If water leaks, tighten the screw connections.

The filters **must** be put back in place after cleaning.

Frequently asked questions . . .

Problem solving guide

Many malfunctions and faults that can occur in daily operation can be easily remedied. In many cases this will save you time and money because you won't need to book a service technician.

The tables below will help you to find the reason for a fault, and how to correct it. However, please note:

⚠ Repairs by unqualified persons can cause considerable danger to users. Repair work to electrical appliances must only be carried out by an authorized technician.

The wash program will not start

Problem	Possible cause and solution
The control panel remains dark.	There is no power to the machine. ■ Check whether the plug is plugged in. ■ Check whether the fuse has tripped.
	The washing machine has switched off automatically to save energy. ■ Switch the washing machine on again by turning the program selector.
F **and** *34* **appear alternately on the time display.**	The door is not closed properly. The door lock could not engage. ■ Close the door again. ■ Start the program again. If the fault message appears again, contact the Service department.

The program is cancelled and a fault indicator light lights up on the control panel

Problem	Possible cause and solution
The fault indicator light lights up, F and 10 appear alternately on the time display, and the buzzer sounds.	The water inlet is blocked or restricted. ■ Check whether the tap is turned on properly. ■ Check whether the inlet hose is kinked. ■ Check whether there is sufficient water pressure.
	The filter in the water inlet is blocked. ■ Clean the filter.
The fault indicator light lights up, F and 11 appear alternately on the time display, and the buzzer sounds.	The drain is blocked or restricted. The drain hose has been fixed too high. ■ Clean the filter and the pump. ■ The maximum drain height is 1 m.
The fault indicator light lights up, F and 138 appear alternately on the time display, and the buzzer sounds.	The water protection system has reacted. ■ Close the tap. ■ Contact the Service department.
F and XXX appear alternately on the time display and the buzzer sounds.	There is a fault. ■ Disconnect the washing machine from the electricity supply, either by switching it off at the wall socket and withdrawing the plug, or by disconnecting it at the circuit breaker. ■ Wait **at least 2 minutes** before reconnecting the washing machine to the electricity supply. ■ Then switch the washing machine on again. ■ Restart the program. If the fault message appears again, contact the Service department.

Frequently asked questions . . .

During the program, a symbol appears on the time display

Message	Possible cause and solution
-0- **lights up.**	The program selector was moved to a different position after the program had started. ■ Turn the program selector back to the original position.
	The program has been interrupted. ■ Open the door. ■ Close the door.

An indicator light in the control panel lights up at the end of the program.

Problem	Possible cause and solution
The indicator light ⌓ lights up.	Excessive foam has built up during washing. ■ Use less detergent next time and follow the manufacturer's instructions on dosage given on the packaging.
The indicator light ✣ lights up.	A wash program using a temperature above *hot* + has not been run for a long period of time. ■ In order to prevent bacteria and unpleasant odours building up in the machine, run the *Sanitize Sani* program using Miele Washing Machine Cleaner or universal powder detergent.

General problems with the washing machine

Problem	Possible cause and solution
The washing machine smells.	The indicator light ✣ was ignored. A wash program using a temperature above *hot* + has not been run for a long period of time. ■ In order to prevent bacteria and unpleasant odours building up in the machine, run the *Sanitize Sani* program using Miele Washing Machine Cleaner or universal powder detergent.
	The door and detergent dispenser drawer were closed after washing. ■ Leave the door and the detergent dispenser drawer slightly open to allow them to dry.
The machine shakes during the spin cycle.	The machine feet are not level. ■ Level the machine and adjust the feet correctly.
The laundry has not been spun properly and the laundry is still wet.	The machine detected an imbalance during the final spin and reduced the spin speed automatically. ■ Wash large and small items together in order to achieve a more even load distribution.
Strange pump noises can be heard.	Not a fault. Slurping noises occur at the start and end of the pump sequence as a normal part of operation.
Large amounts of detergent residue remain in the detergent dispensing drawer.	The water pressure is too low. ■ Clean the filter in the water inlet. ■ Please note that the water pressure must be at least 100 kPa (1 bar).
	Powder detergent used in conjunction with water softeners tends to become sticky. ■ Clean the detergent dispenser drawer and in future, add detergent first and then the water softener.

Frequently asked questions . . .

General problems with the washing machine

Problem	Possible cause and solution
Fabric softener is not completely dispensed or too much water remains in the ❀ compartment.	The siphon tube is not correctly positioned or clogged. ■ Clean the siphon (see “Cleaning and care – Cleaning the detergent dispensing drawer”).
At the end of the program there is still liquid in the capsule.	The small pipe in the detergent dispenser drawer onto which the capsule is placed is blocked. ■ Clean the small pipe.
	Not a fault. For technical reasons, a small amount of water will remain in the capsule.
There is water next to the capsule in the fabric softener compartment	The *Cap* ⌒ sensor button was not activated or an empty capsule was not removed at the end of the last wash cycle. ■ Make sure that you remember to activate the *Cap* ⌒ sensor button the next time you insert a capsule. ■ Remove and then dispose of the empty capsule at the end of each wash cycle.
	The small pipe in the detergent dispenser drawer onto which the capsule is placed is blocked. ■ Clean the small pipe.

An unsatisfactory wash result

Problem	Possible cause and solution
Liquid detergent is not achieving the required results.	Liquid detergents do not contain bleaching agents. Consequently, fruit, coffee, and tea stains cannot always be removed. ■ Use powder detergent containing a bleaching agent. ■ Use the appropriate capsule or add stain removers to the II compartment. ■ Never put stain removers and liquid detergent together in the detergent dispenser drawer.
Grey, greasy particles cling to washed laundry.	Insufficient amounts of detergent were used. The laundry was heavily soiled with grease (oils, ointments). ■ Use more detergent or liquid detergent with this type of soiled laundry. ■ Before washing the next load, run a 60°C program with liquid detergent but without a load.
White residues which look like powder detergent are seen on dark fabrics after washing.	The detergent contained compounds (zeolites) to aid water softening which are not soluble in water. These have ended up on the laundry. ■ Try and brush off the residues with a soft brush once the laundry is dry. ■ In future, wash dark fabrics using a detergent which contains no zeolites. Liquid detergents do not usually contain zeolites. ■ Use the *Darks*/*Denims* program to wash the fabrics.

Frequently asked questions . . .

The door will not open

Problem	Possible cause and solution
The door cannot be pulled open during a program.	The drum is locked during a program. ■ Touch the *Start*/*Stop* sensor button to cancel the program. The program is cancelled, the door will unlock, and you will be able to pull it open.
	There is still water in the drum and the machine is unable to drain. ■ Clean the drain filter and the drain pump as described in “Opening the door in the event of a blocked drain outlet and/or power cut”.
After the program is cancelled, flashing bars ⌐¯⌐...⌐_⌐...⌐¯⌐... appear on the time display.	To protect the user against scalding, the door cannot be opened if the suds temperature is higher than 55°C. ■ Wait until the temperature in the drum has decreased and the bars have stopped flashing on the time display.
F **and** *35* **appear alternately on the time display.**	The door lock has jammed. ■ Contact the Service department.

Opening the door in the event of a blocked drain outlet and/ or power failure

■ Turn off the washing machine.

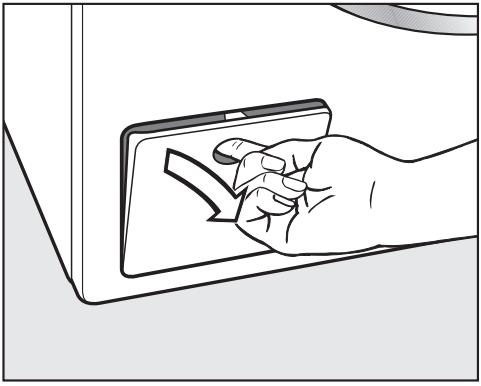

■ Open the drain pump flap.

Blocked drain outlet

If the drain outlet is blocked, a larger quantity of water can remain in the washing machine.

⚠ Risk of scalding due to hot suds.
Escaping suds will be hot if laundry has been washed at high temperatures.
Carefully allow all suds to drain off.

Draining the washing machine

Remove the drain filter, though not completely.

■ Place a suitable container under the flap, e.g. a Miele universal oven tray.

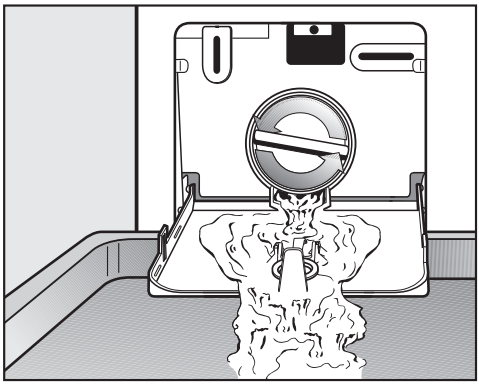

■ Slowly unscrew the drain filter to let the water out.

■ Tighten the drain filter back up again if you need to interrupt the flow of water.

Once the flow of water stops:

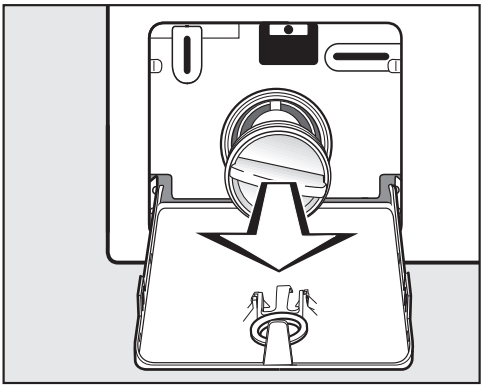

■ Remove the drain filter completely.

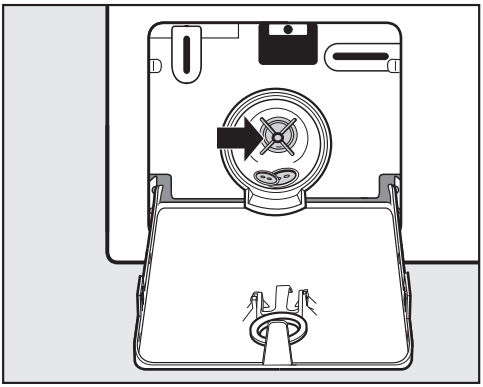

- Clean it thoroughly.
- Remove any foreign objects (e.g. buttons, coins, etc.) and clean the interior. Turn the impellers by hand to check that they rotate freely.
- Replace the drain filter correctly and tighten it securely.
- Close the drain pump flap.

⚠ Risk of water damage
Make sure the drain filter is securely tightened. Otherwise there is a risk of water leakage during use.
Replace the drain filter correctly and tighten it securely.

Opening the door

⚠ Risk of injury due to rotating drum.
Reaching into a rotating drum is extremely dangerous.
Always make sure that the drum is stationary before reaching in to remove laundry.

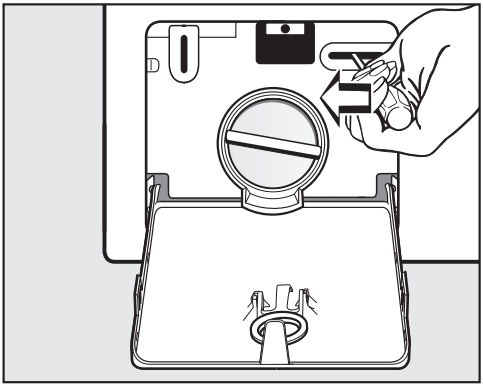

- Use a screwdriver to unlock the door.
- Pull open the door.

Contact in case of a fault

In the event of any faults which you cannot remedy yourself, please contact your Miele Dealer or the Miele Service.

Contact information for Miele Service can be found at the end of this document.

Please quote the model and serial number of your appliance when contacting Miele. This information can be found on the data plate.

The data plate is found above the porthole glass when the door is opened.

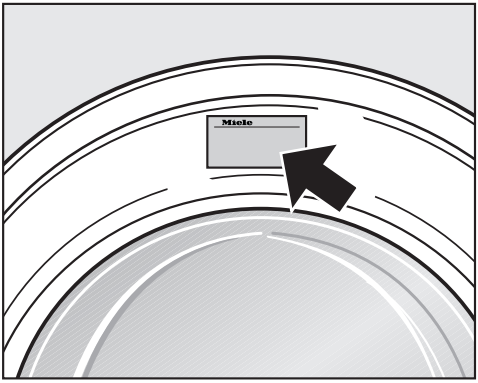

Optional accessories

Optional spare parts and accessories for this washing machine are available from Miele.

Warranty

For further information, please refer to your warranty booklet.

Installation instructions

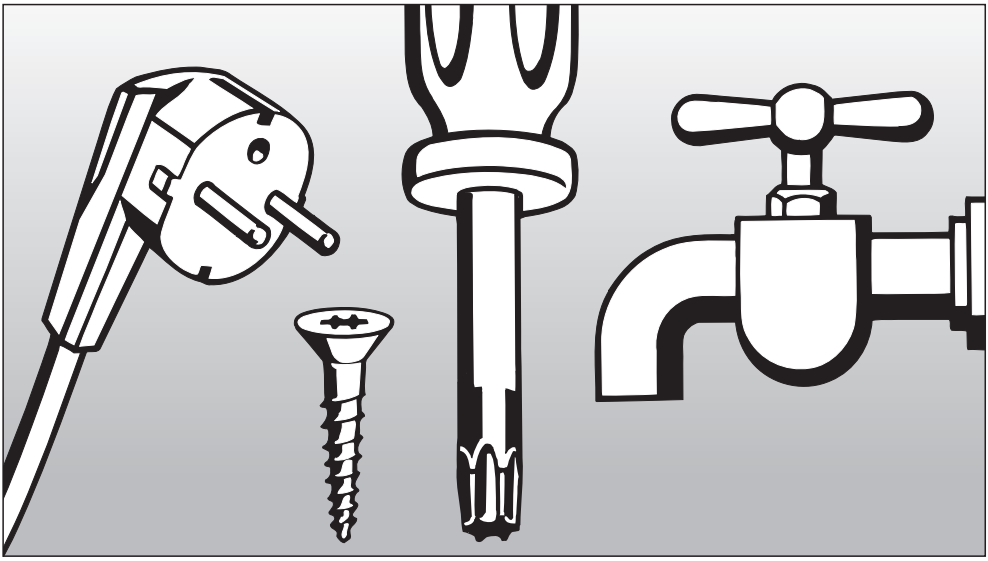

Alteration rights reserved.
Visit our website for all the current product specifications, technical appliance information, and warranty information.

To avoid accidents or damage to the appliance, please read these instructions before installing and/or using it.

Front view

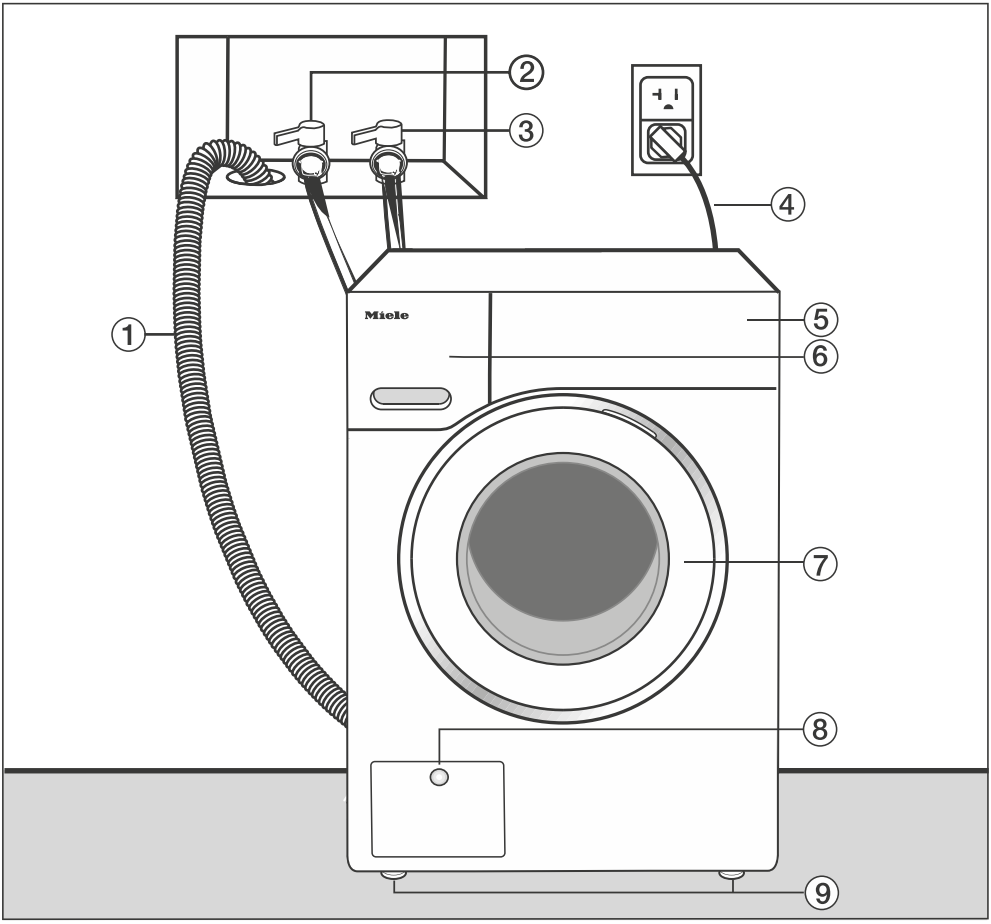

① Drain hose

② Hot-water inlet hose (pressure-proof to 1,015 psi/7,000 kPa)

③ Cold-water inlet hose (pressure-proof to 1,015 psi/7,000 kPa)

④ Electrical connection

⑤ Control panel

⑥ Detergent dispenser drawer

⑦ Door

⑧ Flap for drain filters, drain pump, and emergency release

⑨ Four height-adjustable feet

Rear view

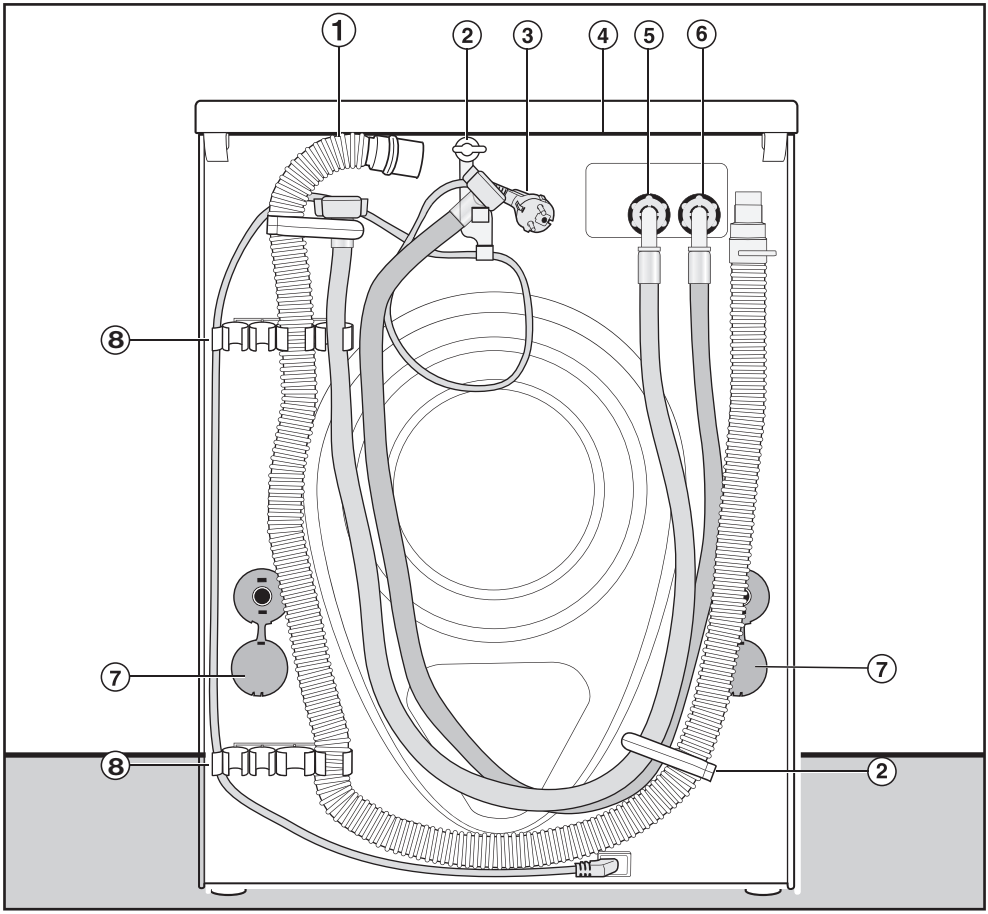

① Drain hose

② Transport clips for inlet and drain hoses and electrical supply cable

③ Electrical connection

④ Protruding lid for holding when moving the machine

⑤ Cold-water inlet hose (pressure-proof to 1,015 psi/7,000 kPa)

⑥ Hot-water inlet hose (pressure-proof to 1,015 psi/7,000 kPa)

⑦ Safety caps for transit bars

⑧ Transport clips for inlet and drain hoses and for storing transit bars when not in use

Installation surface

A concrete floor is the most suitable installation surface. It is far less prone to vibration during the spin cycle than wooden floorboards or a carpeted surface.

Please note:

- The machine must be level and securely positioned.
- To avoid vibrations during spinning, the machine should not be installed on soft floor coverings.

If installing on a wooden joist floor:

- Install the machine on a plywood base (at least 59 x 52 x 3 cm). The base should span several joists and be bolted to the joists, not just the floorboards.

Useful tip: If possible, install the machine in a corner. This is usually the most stable part of the floor.

⚠ Injury can occur if the washing machine has not been adequately secured.
During installation, the washing machine must be secured on a plinth to be made available on site (concrete or brick), in order to ensure it cannot fall or slip.
Secure the washing machine using a clamp/fastening bracket (MTS floor mounting kit – available from your Miele dealer or Miele Service department).

Transporting the washing machine to its installation site

⚠ Danger of injury due to unsecure lid.
The fixings at the back of the lid may become brittle due to external circumstances. There is a danger of the lid being pulled off when carrying the appliance.
Before carrying the appliance, check that the lid is secure where it protrudes at the back of the appliance.

- Carry the washing machine by the front feet and by the lid where it protrudes at the back of the appliance.

Removing the shipping struts

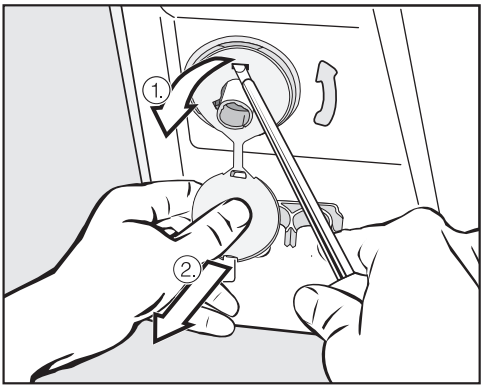

- Remove the left and right covers.

1. Pull off the shipping strut covers and
2. then use a screwdriver to release the catches at the top and bottom.

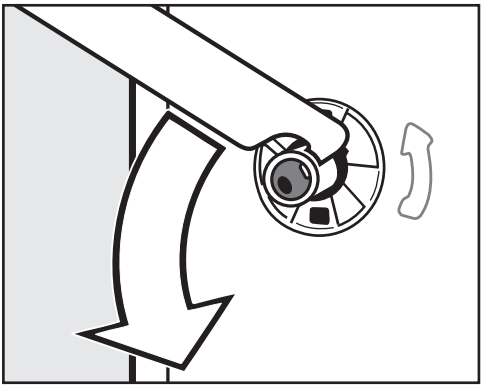

■ Using the wrench supplied, turn the left-hand shipping strut 90°, then

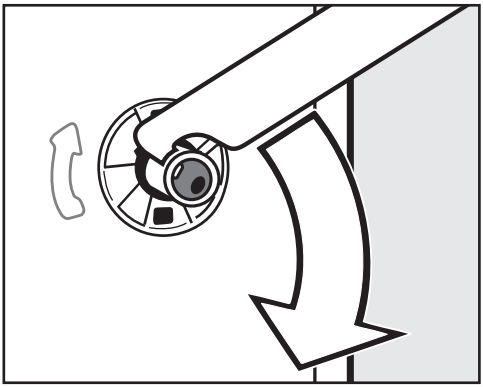

■ Turn the right-hand shipping strut 90°, then

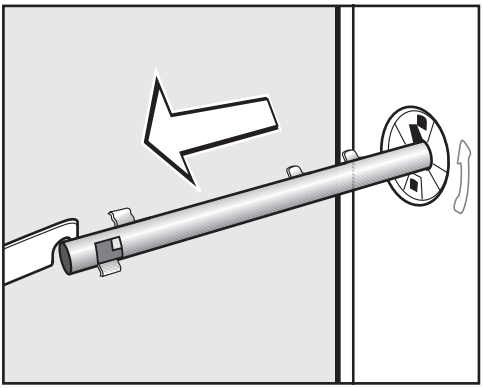

■ withdraw the shipping strut.

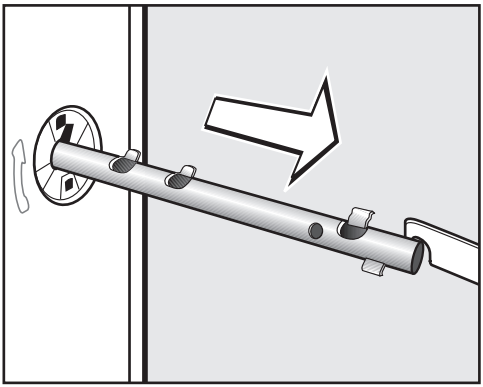

■ withdraw the shipping strut.

⚠ Risk of injury from sharp edges.
There is a risk of injury from reaching into holes that are not covered.
Cover the holes for the shipping struts after they have been removed.

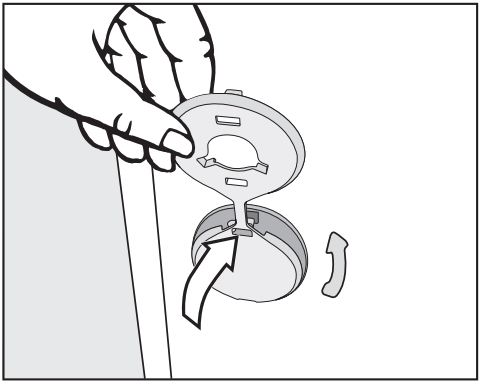

■ Install the covers onto the holes.

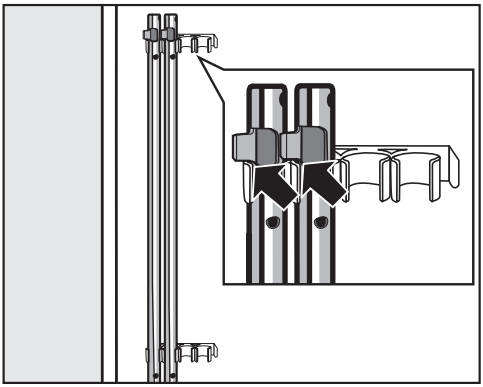

■ Secure the shipping struts to the back of the washing machine. Make sure that the top catch is located above the holder.

⚠ Risk of damage from incorrect transport.
The washing machine may become damaged if moved without the shipping struts in place.
Keep the struts in a safe place. Install them again if the machine is to be moved (e.g. when moving to a new house).

Refitting the transit bars

Refitting is carried out by reversing the procedure.

Levelling the machine

The washing machine must stand perfectly level on all four feet to ensure safe and proper operation.

Incorrect installation may increase electric and water consumption and may cause the machine to move about.

Unscrewing and adjusting the feet

The four adjustable screw feet are used to level the washing machine. All four feet are screwed in when the washer-dryer is delivered.

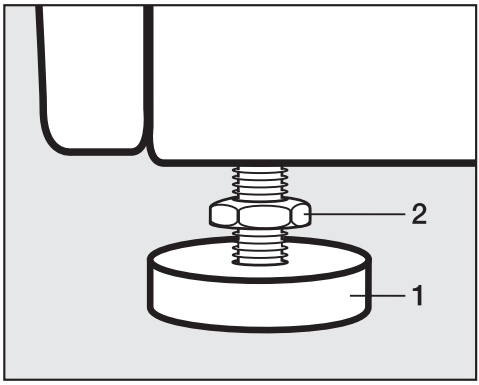

- Using the wrench supplied, turn counter nut **2** in a clockwise direction. Then turn counter nut **2** together with foot **1** to unscrew.

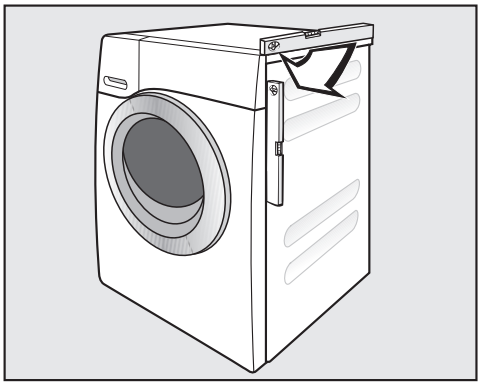

- Use a level to check that the washing machine is standing level.
- Hold foot **1** securely with a pipe wrench. Turn counter nut **2** again using the wrench supplied until it sits firmly up against the housing.

⚠ Risk of damage due to incorrectly aligned washing machine.

There is a danger of the washing machine moving about if the feet are not secured.

Turn all four counter nuts for the feet until they sit firmly up against the housing. Please also check this for the feet which did not need adjustment.

Additional installation requirements

The washing machine must be installed in accordance with the relevant local regulations.

⚠ Damage resulting from failure to remove the transit bars.

Failure to remove the shipping struts can result in damage to the washing machine and to adjacent cabinetry or appliances.

Remove the shipping struts as described in “Installation and connection”.

Installing under a countertop

⚠ Risk of electric shock due to exposed cables

There is a risk of coming into contact with live parts while the lid is removed.

Do not remove the washing machine lid.

This washing machine (with lid intact) can be pushed under a countertop if there is space to do so.

Setting up the cabinet

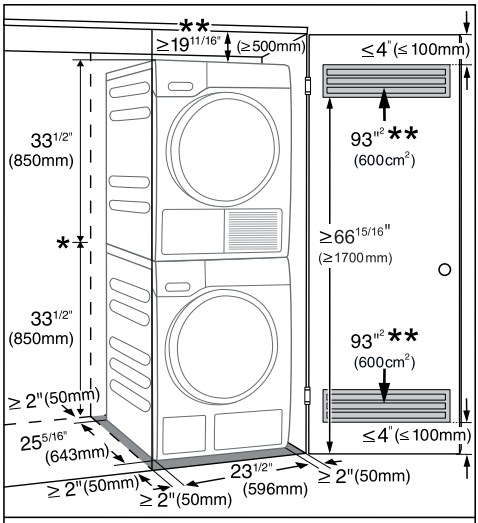

* Height with Stacking Kit
WTV502 = 67 3/8" (1711 mm)
WTV512 = 71 1/8" (1806 mm)

** If it is not possible to fulfill the dimension specification you may have longer drying and process time.

For closets at room height

You can also insert a ventilation opening at the top of the closet. In addition, you must also provide an opening on the bottom side of the door.

⚠ Risk of damage due to overheating of the washing machine.
The air supply must not be hindered by an additional closet or shelf.
Please ensure that air is able to circulate freely at the top of the closet.

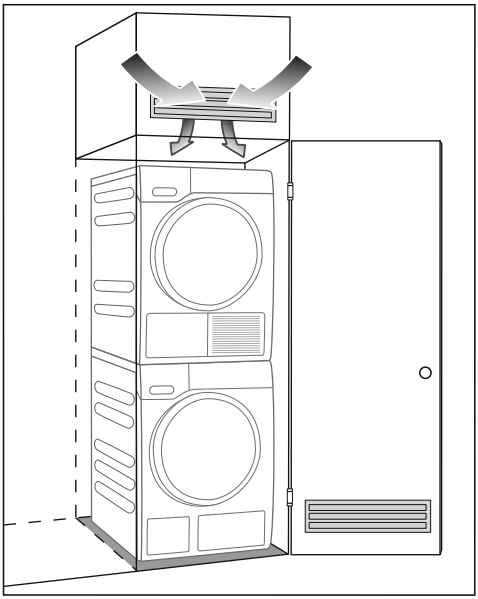

Product dimensions

Dimensions

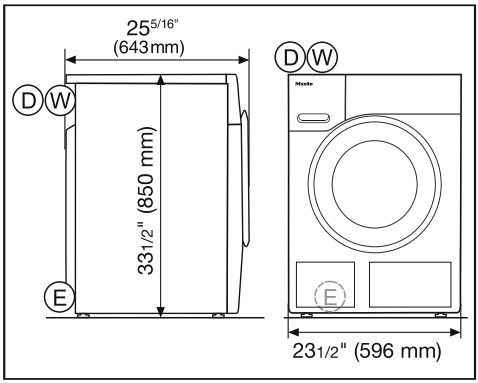

Ⓓ = 1.50 m drain hose with connection to the top left on the rear

Ⓔ = 2.00 m electrical cord with plug for 120 V, 15 A (NEMA 5-15 configuration) to the top left on the rear

Ⓦ = 1.60 m hot and cold-water intake hoses to the top left on the rear

Installation

Installation on a plinth

– WTS 510 (only available in white)

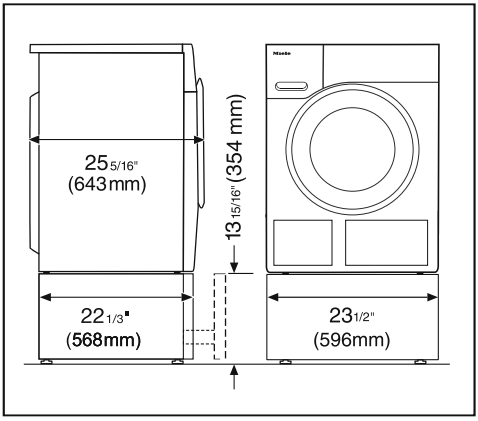

Washer-dryer stack

– WTV 512 and WTV 502 washer-dryer stacking kit

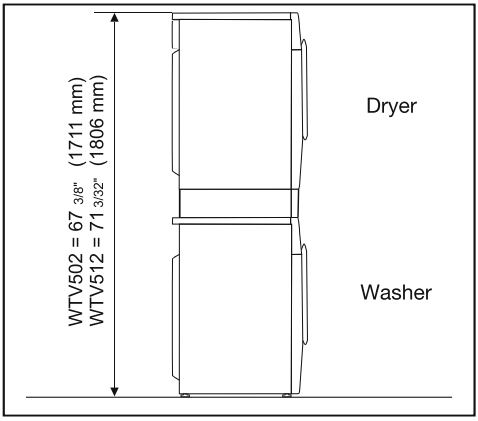

The Miele water protection system

The Miele water protection system protects all parts of the washing machine and its surroundings from water damage.

The system mainly consists of the following components:

– the inlet hose

– the electronic unit, and the drainage and overflow protection

– the drain hose

Inlet hoses

– Protection against the hoses bursting The inlet hose can withstand pressure of more than 1,015.26 psi/7,000 kPa.

Electronic unit and machine housing

– Sump: Any leaking water from the washing machine is collected in a sump in the base of the machine. A float switches off the water inlet valves. This shuts off the water intake and prevents any more water from flowing into the machine. Water in the suds container is pumped away.

– Overflow protection: This prevents the washing machine from taking in too much water and overflowing. If the water level exceeds a certain level, the drain pump switches on and pumps the excess water away.

Drain hose

The drain hose is protected by a ventilation system which prevents the machine from being emptied completely.

Water intake

The washing machine should be connected to a domestic water supply in accordance with current local and national safety regulations. The German authorities do not require it to have a non-return valve as the washing machine has been designed to comply with DIN regulations.

The flow pressure must be at least 100 kPa and must not exceed an overpressure of 1,000 kPa. If it is higher than 1,000 kPa, a pressure reduction valve must be installed.

For the connection, a water tap with a ¾“ screw thread is required. If not available, only a qualified installer may connect the washing machine to the water supply.

The connection points are subject to water supply pressure.
Turn on the tap slowly and check for leaks. Correct the position of the seal and union if necessary.

Maintenance

Only use a genuine Miele hose that has been tested to withstand pressure of over 1,015.26 psi/7,000 kPa should you ever need a replacement.

⚠ A filter is located in the open end of the inlet hose and another in the intake point to protect the inlet valve. Neither filter may be removed.

Drainage

The suds are drained through a drain pump with a 1 m delivery head. For the water to drain freely, the hose must be installed free of kinks.
If required, the hose can be extended to a length of up to 5 m. Accessories are available from Miele or from your Miele dealer.

Drainage options:

1. Direct into a sink or basin:

   Please note:

   – Hook the hose over the edge and secure!

   – If the water is pumped into a sink, be sure that it can drain away quickly enough. Otherwise there is a risk of water overflowing or of some of the drained water being sucked back into the machine.

2. Connected securely to a plastic drain pipe with a rubber nipple (there is no need to use a non-return valve).

3. Connected securely to a floor drain.

4. Connected securely to a sink with a plastic nipple.

Electrical connection

GROUNDING INSTRUCTIONS

The washing machine must be grounded. Connecting the appliance to ground reduces the danger of electric shock in the event of a malfunction. The grounding is a protective conductor which provides a path of least resistance for the current. The washing machine comes complete with a power cord and plug with the corresponding protective conductor. The plug must be inserted into a suitable socket. The socket must be installed and grounded in accordance with the locally applicable regulations.

WARNING! Incorrectly connected ground conductors will pose the danger of electric shock. Contact a qualified electrician or customer service staff if you have any doubts as to whether the washing machine has been grounded properly.

Do not replace or make any changes to the plug supplied. If there is no suitable socket available, one must be installed by a qualified electrician.

Instructions for electrical connection

The installation must be carried out by an experienced and qualified specialist in accordance with local regulations.

The washing machine is equipped with a 5' 3" (1.6 m) long, 3-wire cable with a NEMA-5-15 plug, which is ready for connection to a 120 V, 15 A, 60 Hz AC power supply.

A suitable socket can be furnished by an electrical retailer.

Height	33 7/16" (850 mm) mm
Width	23 7/16" (596 mm) mm
Depth	25 1/16" (636 mm) mm
Depth with door open	41 1/2" (1054 mm) mm
Height for building under	32 5/16" (+5/16"/-1/16") (820 mm) mm
Width for building under	23 5/8" (600 mm) mm
Weight	Approx. 220.5 lb (100 kg) kg
Capacity	17.6 lb (8 kg) kg dry laundry
Connection voltage	See data plate
Connected load	See data plate
Fuse rating	See data plate
Consumption data	See “Consumption data”
Minimum water flow pressure	100 kPa (1 bar)
Maximum water flow pressure	1,000 kPa (10 bar)
Inlet hose length	1.60 m
Drain hose length	1.50 m
Power cord length	2.00 m
Maximum drain height	1.00 m
Maximum drain hose length	5.00 m
LEDs	Class 1
Test certificates awarded	See data plate

Programmable functions

The programmable functions are used to alter the machine's electronics to suit changing requirements. Programmable functions can be altered at any time.

Programming is carried out in 8 steps (❶, ❷, ❸ ... ❽) using the sensor buttons.

Accessing the programming level

Before you begin, ensure the following:

– The washing machine is switched on (the program selector is pointing to a wash program).

– The washing machine door is open.

❶ Touch the *Start*/*Stop* sensor button and hold it down during steps ❷–❸.

❷ Close the washing machine door.

Wait until the *Start*/*Stop* sensor button lights up constantly ...

❸ ...and then release the *Start*/*Stop* sensor button.

After approximately 4 seconds, *P13* will light up on the time display.

Choosing and selecting programmable functions

The number of the programmable function will appear on the time display as *P* and a number: e.g. *P12*.

❹ Touch the > or < sensor button to scroll to the next or previous programmable function:

Programmable functions	
P12	Buzzer
P13	Keypad tone
P14	PIN code
P22	Control panel switch-off status
P24	Memory
P25	Water inlet
P26	Additional long prewash – Normal
P28	Gentle action
P29	Reduce temperature
P32	Maximum rinse level
P33	Suds cooling
P34	Anti-crease action
P49	Low water pressure
P55	Chlorine bleach
P62	Display brightness dimmed
P63	Welcome tone volume

❺ Confirm the selected programmable function by touching the *Start*/*Stop* sensor button.

Editing and saving the programmable function

You can either switch a programmable function on/off or select different options.

❻ Touch the > or < sensor button to switch the programmable function on/off or to select an option:

Programmable function	Available options					
	-00	-01	-02	-03	-04	-05 – -07
P12	X	X	O			
P13	X	O	X			
P14	O	X				
P22	X	O				
P24	O	X				
P25		X	O			
P26	O	X	X	X		
P28	O	X				
P29	O	X				
P32	O	X				
P33	O	X				
P34	X	O				
P49	O	X				
P55	O	X				
P62		X	X	O	X	X
P63	X	O	X			

X = Can be selected

O = Factory default setting

❼ Confirm the chosen selection with the *Start*/*Stop* sensor button.

The number of the programmable function, e.g. *P13*, will then light up again.

Exiting the programming level

❽ Turn the program selector to ⏻.

The settings you have selected are now stored in the memory. You can alter the settings again at any time.

P12 Buzzer

The buzzer sounds to let you know the program has finished.

Options

-00 = Buzzer is switched off

-01 = Normal buzzer volume

-02 = Loud buzzer volume **(factory default setting)**

P13 Keypad tone

Each touch of a sensor button is confirmed with an audible tone.

Options

-00 = Keypad tone is switched off

-01 = Keypad tone is switched on **(factory default setting)**

P14 PIN code

The PIN code prevents the washing machine being used without your knowledge.

When the PIN code has been activated, you have to enter it after switching the washing machine on. Otherwise, the washing machine cannot be operated.

Options

-00 = PIN code is switched off **(factory default setting)**

-01 = PIN code is switched on

Using the washing machine with a PIN code

The code is **125** and cannot be altered.

■ Switch on the washing machine.

_ _ _ appears on the time display and the > and < sensor buttons light up.

■ Touch the > sensor button.

I _ _ appears on the time display.

■ Confirm the number with the *Start*/*Stop* sensor button.

The first number has been saved and you can now enter the second number using the > and < sensor buttons.

■ Enter the second and third numbers and confirm the numbers with the *Start*/*Stop* sensor button.

The lock is released and a wash program can now be selected and started.

P22 Control panel switch-off status

To save energy, the time display and sensor buttons will go out after 10 minutes, and only the *Start*/*Stop* sensor button will flash.

Options

-00 = Off
The time display and sensor buttons will remain lit up while the washing machine is switched on

-01 = On **(factory default setting)**
The time display and sensor buttons will switch off after 10 minutes if the program is started.

However, the time display and sensor buttons will remain lit up for 10 minutes after a Delay start time has elapsed, after the end of a program, or at the end of the Anti-crease phase.

P24 Memory

The washing machine will save the last settings (temperature, spin speed, and some of the Options) selected for a program after the program has started.

When the program is chosen again, the saved settings will appear in the display.

Options

-00 = Memory is switched off **(factory default setting)**

-01 = Memory is switched on

P25 Water inlet

You can program 2 options for the water inlet. The water inlet is controlled by the two inlet hoses.

Options

-01 = Cold water

The washing machine will be operated with cold water only.

-02 = Hot water **(factory default setting)**

Hot water is used in the main wash.

⚠ Damage caused by incorrect water connection.

Connection to a hot water supply only is not permitted. When being operated with hot water, the washing machine always requires a cold water connection as well in order to control the temperature of the water used for washing the laundry.

The washing machine must always be connected to cold water.

P26 Additional long prewash – Normal

If you require a longer prewash, you can extend the prewash time.

Options

-00 = **No** increase in the prewash time **(factory default setting)**

-01 = **+ 6 minutes** increase in the prewash time

-02 = **+ 9 minutes** increase in the prewash time

-03 = **+ 12 minutes** increase in the prewash time

P28 Gentle action

With gentle action activated, drum rotation is reduced. In this way, lightly soiled items can be washed more gently.

Gentle action can be activated for the *Normal* and the *Wrinkle-free* programs.

Options

-00 = Gentle action is switched off **(factory default setting)**

-01 = Gentle action is switched on

P29 Reduce temperature

At high altitudes, water has a lower boiling point. Miele recommends activating the reduce temperature setting at altitudes of or above 2,000 m to prevent water from boiling. The maximum temperature is reduced to 80°C, even if a higher temperature is selected.

Options

-00 = The reduce temperature setting is switched off **(factory default setting)**

-01 = The reduce temperature setting is switched on

P32 Maximum rinse level

The water level in the rinse can be permanently set to the highest value.

This function is important for allergy sufferers as it achieves excellent wash results. The water consumption will be increased.

Options

-00 = Maximum rinse level is switched off **(factory default setting)**

-01 = Maximum rinse level is switched on

P33 Suds cooling

Additional water flows into the drum at the end of the main wash to cool the suds down.

Suds cooling takes place when a Normal program with a temperature of 70°C or higher is selected.

Suds cooling should be activated:

– To prevent the danger of scalding if the drain hose is hooked over the edge of a sink or basin.

– Where the drainage pipes do not comply with DIN 1986.

Options

-00 = Suds cooling is switched off **(factory default setting)**

-01 = Suds cooling is switched on

P34 Anti-crease

The Anti-crease function reduces creasing after the end of the program.

At the end of the program, the drum continues to turn at intervals for up to 30 min. The door can be opened at any time during the Anti-crease phase.

Options

-00 = The Anti-crease function is switched off

-01 = The Anti-crease function is switched on **(factory default setting)**

P49 Low water pressure

If the water pressure is below 100 kPa (1 bar), the program will be cancelled and the fault message will appear.

If the water pressure cannot be increased, activating this function will prevent the program from being cancelled.

Options

-00 = Low water pressure is switched off **(factory default setting)**

-01 = Low water pressure is switched on

P55 Chlorine bleach

You can activate the automatic addition of chlorine bleach at the end of the main wash.

Chlorine bleach may only be used in some programs. See “5. Adding detergent – Using chlorine bleach” for more detailed information.

Activating chlorine bleach extends the program duration by approximately 10 minutes.

Options

-00 = Chlorine bleach is switched off **(factory default setting)**

-01 = Chlorine bleach is switched on

P62 Display brightness dimmed

The brightness of the dimmed sensor buttons on the control panel can be set to one of seven different levels.

The brightness will change as soon as a different setting is chosen.

Options

-01 = Darkest level

↓

-07 = Brightest level

-03 = **(Factory default setting)**

P63 Welcome tone

The welcome tone sounds whenever the washing machine is switched on.

You can switch the welcome tone on or off.

Options

-00 = Welcome tone is switched off

-01 = Welcome tone is switched on at normal volume **(factory default setting)**

-02 = Welcome tone is switched on at loud volume

Detergent, fabric care products, additives, and machine care products are available for this washing machine. All the products have been designed for Miele Washing Machines.

These and many other useful products can be ordered via the Miele online shop, from your Miele dealer, or from Miele directly.

Detergent

UltraWhite

– Multi-purpose powder detergent
– For white and light-coloured laundry as well as heavily soiled cotton items
– Effective stain removal even at low temperatures

UltraColor

– Liquid detergent for coloured items
– For coloured and dark fabrics
– Protects bright colours from fading
– Effective stain removal even at low temperatures

Wool and delicates detergent

– Liquid detergent for delicates
– Particularly suitable for woollen and silk fabrics
– Cleans at temperatures as low as 20 °C, helps retain the shape of delicate items and protect colours

Speciality detergents

Speciality detergents are available as capsules in convenient single dose amounts or in a handy bottle.

Outdoor

– Liquid detergent for outerwear and performance clothing
– Cleans with care and is gentle on colours
– With lanolin to care for and condition membrane fabric

Sport

– Liquid detergent for sportswear and fleece garments
– Neutralizes unpleasant odours
– Retains the shape of the fabrics

Downs

– Liquid detergent suitable for pillows, sleeping bags, and down-filled items
– Retains the elasticity of down and feather-filled items
– Retains the breathability of down-filled items
– Prevents down filling clumping together

Optional accessories

WoolCare

– Liquid detergent for woollens and delicates

– Includes a special wheat protein conditioning formula

– Helps prevent pilling

– Gentle on colours

– Only available as capsules

SilkCare

– Liquid detergent for silks

– Contains a special silk protein conditioning formula

– Gentle on colours

– Only available as capsules

Fabric care

Fabric care agents are available as capsules in convenient single dose amounts or in a handy bottle.

Proofing agent

– For proofing microfibre fabrics, e.g. rain coats

– Retains the breathability of fabrics

Fabric softener

– Fresh, natural fragrance

– Makes laundry soft to handle

Additive

Booster

– For removing stains

– For white and coloured laundry

– Available as capsules in convenient single dose amounts

Machine care

Detergent

– For cleaning the washing machine thoroughly and effectively

– Removes grease, bacteria, and associated unpleasant odours

– Use 1–3 times per year

Descaling agent

– Removes heavy lime scale deposits

– Mild and gentle with natural citric acid

Water softener tablets

– Reduces quantity of detergent for hard water

– Less detergent residue in fabrics

– Less chemicals in waste water due to reduced amount of detergent

Canada

Importer
Miele Limited

Headquarters and Miele Centre
161 Four Valley Drive
Vaughan, ON L4K 4V8
www.miele.ca

Customer Care Centre
Phone: 800 565-6435
customercare@miele.ca

Germany
Manufacturer
Miele & Cie. KG
Carl-Miele-Straße 29
33332 Gütersloh

Miele

WWB 020

en-CA

M.-Nr. 11 003 030 / 01